ADVANCED ILLUMINATION

24 Volt Power Supply

Product Highlights

- Universal input switching supply
- 24v regulated current DC - runs on 110-220v AC
- Power indicator light
- Tinned leads; marked negative/positive with wire nuts for easy connection



General Specifications

Input Power	90 VAC to 264 VAC universal; AC input frequency ; 47 Hz to 60 Hz
Output Power	24v, 1.67A (40W)
Over Voltage Protection	150% Max, non-condensing
Over Current Protection	Fully Short Circuit Protected
MTBF	50,000 HRs at full load and 25°C
Safety Compliance	UL1950 [E127643]; CSA 22.2 234 [LR56927-121]; TUV EN60950 [S9452057]; MITI [91-544899], [91-54489]
Operating Temperature	0 to 40°C

Part Number Key

Model
PS24-TL
PS24=TL

Stock Product: *ships within 3 days*

PS24-TL

Mechanical Specs

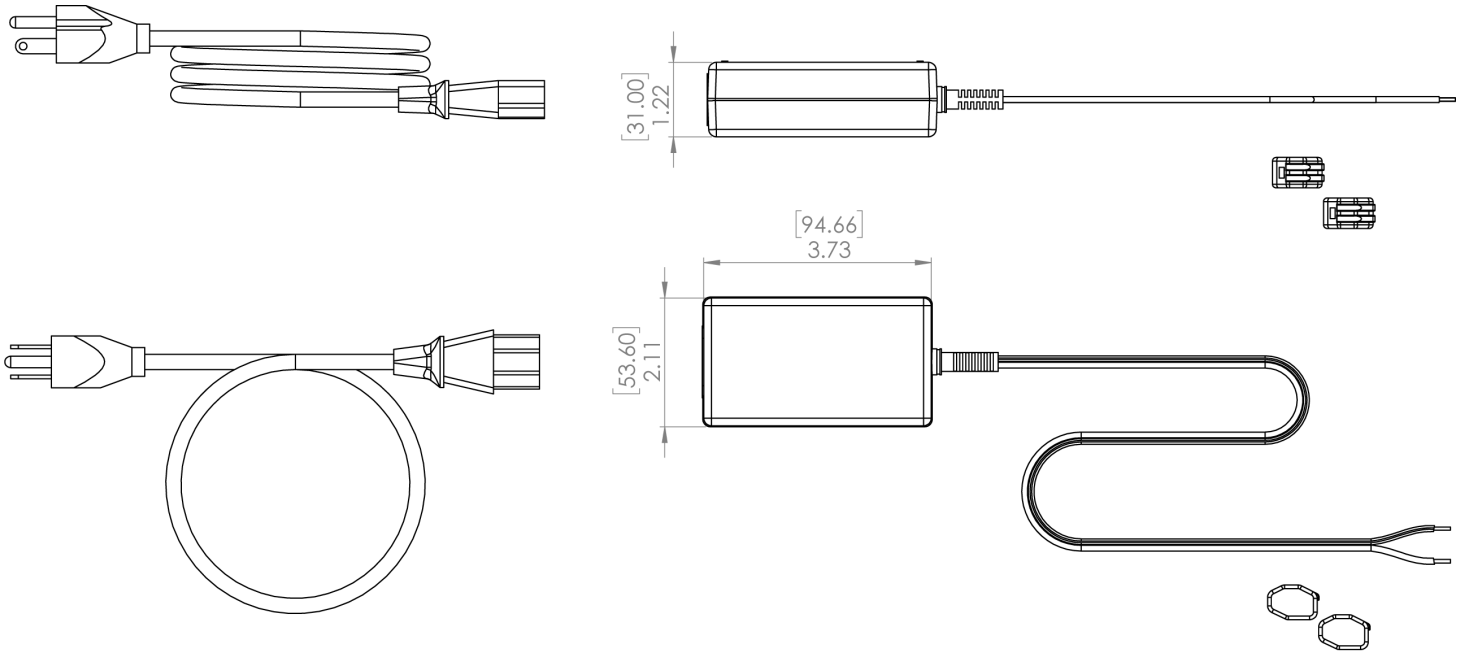

UNITS ARE IN INCHES [MILLIMETERS]

Warranty Information

Every Advanced illumination, Inc. (Ai) product is thoroughly inspected and tested before leaving the factory. Products are warranted to be free of defects in workmanship and materials for a period of FIVE YEARS from the original date of purchase. Should a defect develop during this period, customers may return the complete product, freight prepaid, to one of Ai's distributors or to the Ai factory. All product warranty returns require a Return Merchandise Authorization (RMA) number which is obtained from Customer Service. The RMA number must be clearly marked on the outside of the package. Ai will inspect the unit, and if a defect is found will, at our option, repair or replace the product without charge. Ai disclaims liability for any implied warranties, including implied warranties of "merchantability" and "fitness for a specific purpose." For products under warranty that have since been discontinued, Ai will make an effort to replace with equivalent parts; for circumstances that do not allow for equivalent replacement, Ai reserves the right to repair or replace these products with an updated version. Ai cannot be held responsible for the unauthorized or inappropriate use of its products. Any unauthorized repair or modifications will result in a voided warranty.
No Liability for Consequential Damages: In no event shall Ai be liable for any consequential, special, incidental, or indirect damages of any kind arising from the sale or use of the products.

Electromagnetic Compatibility

This product was tested and complies with the regulatory requirements and limits for electromagnetic compatibility (EMC) as stated in the product specifications. These requirements and limits are designed to provide reasonable protection against harmful interference only when the product is operated in its intended industrial electromagnetic environment. To minimize the potential for electromagnetic interference or unacceptable performance degradation, install and use this product in strict accordance with the instructions in the product documentation.

Customer Service

For information on existing orders, or to make an order adjustment, contact us Monday through Friday 8:00 am to 5:00 pm ET or send an email to orders@advancedillumination.com.

Company Information

Advanced Illumination
440 State Garage Road, Rochester, VT 05767
Phone: 802.767.3830
Fax: 802.767.2636
Email: info@advancedillumination.com
Web: advancedillumination.com
© 2021 Advanced illumination Inc. All rights reserved