AL-S025300

EuroBrite™ Bar Light

Product Highlights

- This EuroBrite™ bar light provides high-intensity illumination at a competitive price point.
- Refer to the full description for more detail.



General Specifications

Electrical Specifications	Color	Current	All Other Controls
	455, 470, 505, 530, 590, 625, 660, 730, 850, 940, WHI	~0.36A	N/A
Input Voltage Range	24V nom. (min 22/max 28)		
Maximum Input Current	0.42-0.49A		
Strobe/On-Off Control	Up to 5X overdrive, active high		
Analog Intensity Control	Analog 0.7-10V; 0.7V=10% 10V=100%		
Trigger-to-Pulse Latency	10µsec		
Normal Operating Temperature	0 - 60°C		
Weight	245g (10.37oz)		
Standard Cable Information	No cable included; see part number LC2-M12-5-FX and LC.5-M12-5-FM or use standard coded 5-pin M12.		
Photobiological Risk Factor	Exempt Applicable Wavelengths: 850, 940 Group 1 (Low-Risk) Applicable Wavelengths: 455, 470, 505, 530, 590, 625, 660, 730, WHI		

Compliance	CE, RoHS, IEC 62471
IP Rating	IP67
Lumen Maintenance	L70 = 50,000 Hours

Part Number Key

Model	–	Mode	Emitting Width (mm)	Emitting Length (Cable Side) (mm)	Lens Type	–	Peak Wavelength
AL	–	X	XXX	XXX	X	–	XXX
AL		S (Strobe)	025	300	M (Medium) W (Wide)		455 (royal blue) 470 (blue) 505 (cyan) 530 (green) 590 (amber) 625 (red orange) 660 (red) 730 (IR) 850 (IR) 940 (IR) WHI (white)

EX:
AL-S025300M-470
AL-S025300W-WHI

Beam Angle (FWHM):
Medium = 21°
Wide = 32°

See website product page for in-stock product numbers.

Shipping:
Stock Products: within three days
Build-to-Order Products: within one to three weeks

Optical Specs

Intensity Distribution

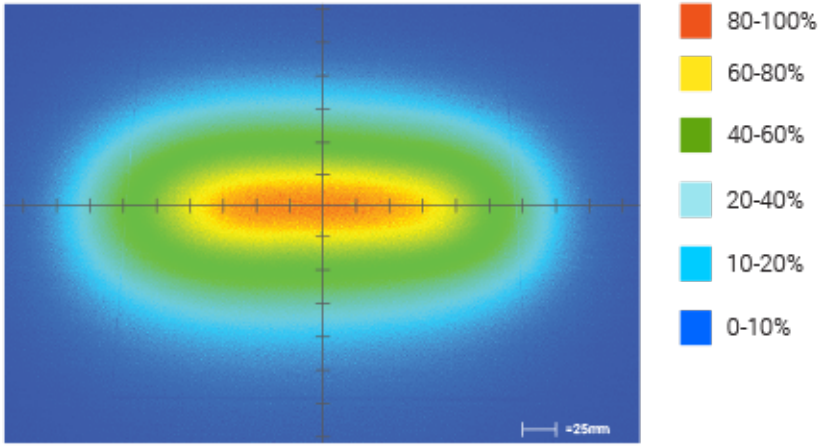

Optical measurement taken using AL-S025300M-WHI @ 300 mm

Area of Illuminance & Intensity

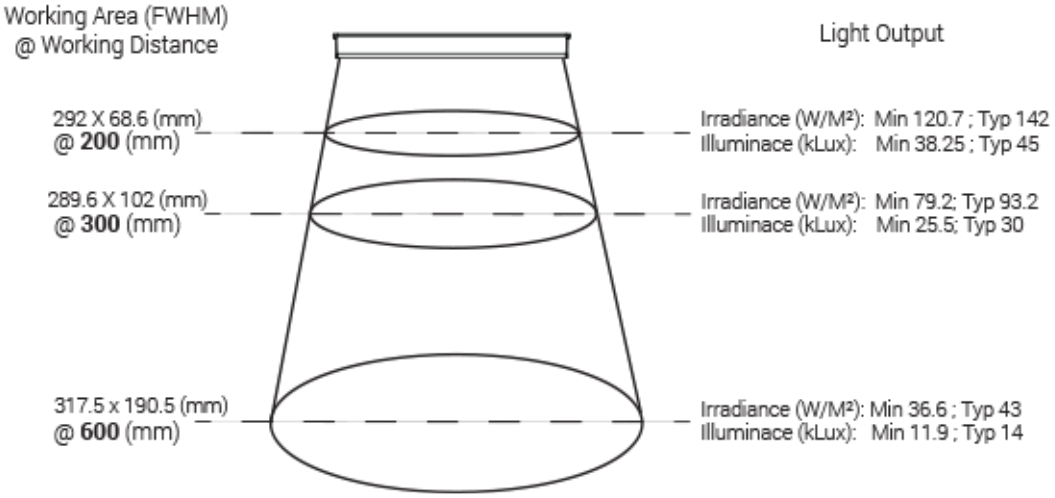

Mechanical Specs

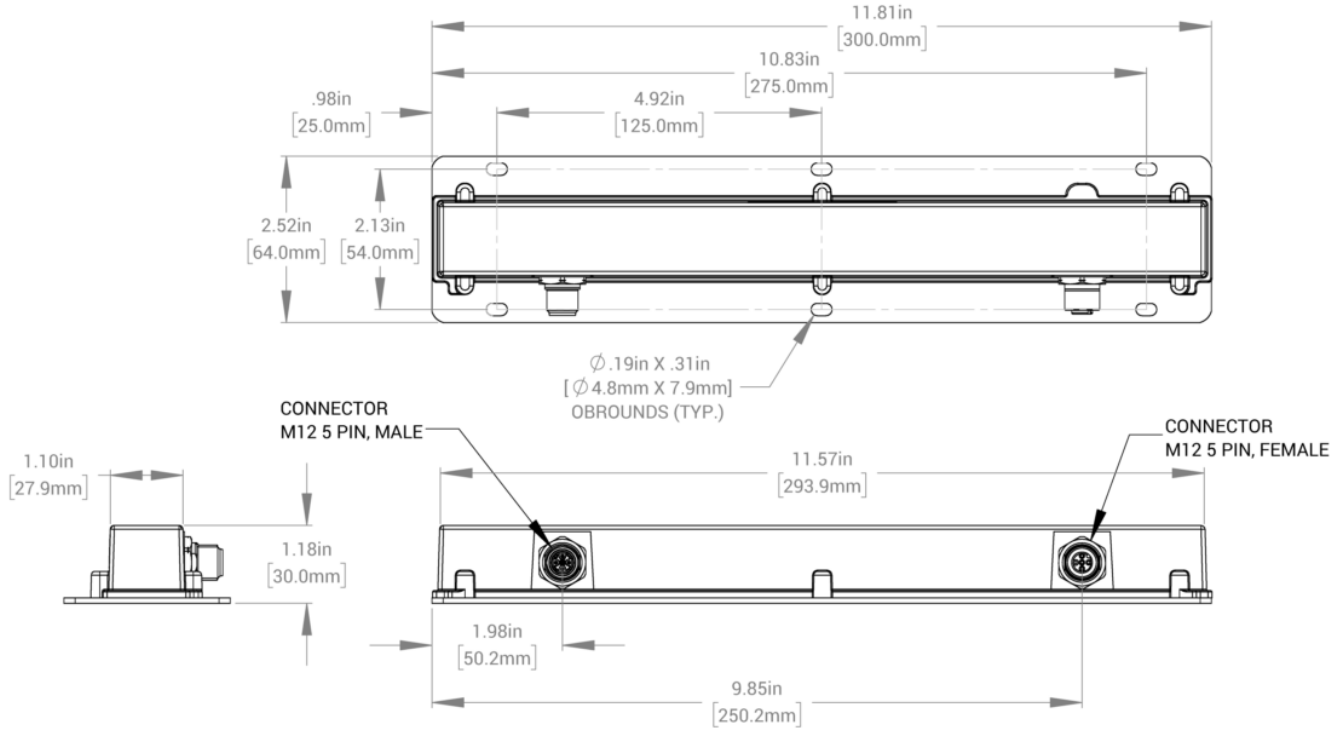

Electrical Specs

Modes of Operation

Continuous	Strobe	Thermal Foldback	Factory Reset
To enable output: Tie Trigger+ (black) HIGH to >0.5V. The light remains ON as long as Trigger+ is high Analog dimming is available during continuous mode operation: pin 5, gray	EuroBrite™ S-version uses Adaptive Overdrive™ to produce overdrive pulses while the Trigger+ is HIGH. Overdrive period occurs for all trigger pulses, but only during the first 5 mSec for those pulse widths longer than 5 mSec; light output can be increased by as much as 5x. Overdriving does not occur when pulses exceed 5 mSec. Analog dimming is available during strobe mode operation: pin 5, gray	To engage Thermal Foldback: Before turning the light on, tie pin 2 (white) to pin 3 (GND, blue). Onboard thermistor is sampled for 5 minutes. Light intensity will automaticaly adjust based on the case tempurature during the training period. The beginning of training is signified by a series of rapid flashes. While training, the light will blink every two seconds. A few slower blinks signal the end of the training period	To engage Factory Reset: Before turning the light on, tie pin2 (white) to pin 3 (blue). For factory reset to occur, the light must be trained for thermal foldback first. Light will appear dim for 3-5 seconds then brightness will be set to factory default. After factory reset is complete disconnect white wire from blue wire for normal operation (before turning light back on). Tying pin 2 (white) to pin 3 (blue) will alternate between factory reset and thermal foldback modes.

Standard Wiring Information

Pin	Function	Wire Color	Type
1	24VDC	Brown	Power
2	Thermal Foldback	White	Input
3	GND	Blue	Power
4	Trigger +	Black	Input
5	Analog	Gray	Input

Male 5-Position

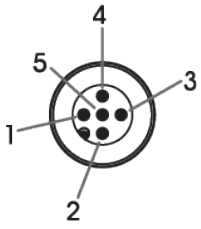

Wiring Diagrams

Basic Strobe Connection

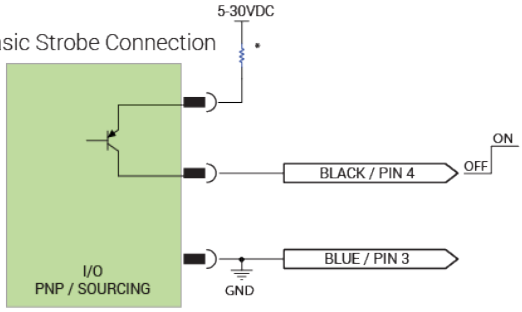

*External resistors may not be needed
Check documentation on I/O for recommendations and voltage limits

Analog Dimming

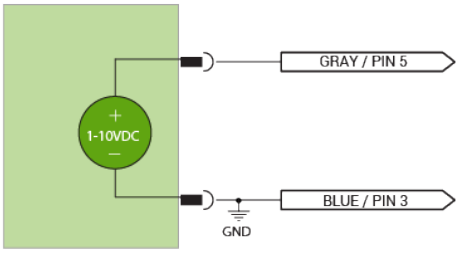

Analog dimming works in both strobe and continuous

Warranty Information

Every Advanced illumination, Inc. (Ai) product is thoroughly inspected and tested before leaving the factory. Products are warranted to be free of defects in workmanship and materials for a period of FIVE YEARS from the original date of purchase. Should a defect develop during this period, customers may return the complete product, freight prepaid, to one of Ai's distributors or to the Ai factory. All product warranty returns require a Return Merchandise Authorization (RMA) number which is obtained from Customer Service. The RMA number must be clearly marked on the outside of the package. Ai will inspect the unit, and if a defect is found will, at our option, repair or replace the product without charge. Ai disclaims liability for any implied warranties, including implied warranties of "merchantability" and "fitness for a specific purpose." For products under warranty that have since been discontinued, Ai will make an effort to replace with equivalent parts; for circumstances that do not allow for equivalent replacement, Ai reserves the right to repair or replace these products with an updated version. Ai cannot be held responsible for the unauthorized or inappropriate use of its products. Any unauthorized repair or modifications will result in a voided warranty.
No Liability for Consequential Damages: In no event shall Ai be liable for any consequential, special, incidental, or indirect damages of any kind arising from the sale or use of the products.

Electromagnetic Compatibility

This product was tested and complies with the regulatory requirements and limits for electromagnetic compatibility (EMC) as stated in the product specifications. These requirements and limits are designed to provide reasonable protection against harmful interference only when the product is operated in its intended industrial electromagnetic environment. To minimize the potential for electromagnetic interference or unacceptable performance degradation, install and use this product in strict accordance with the instructions in the product documentation.

Customer Service

For information on existing orders, or to make an order adjustment, contact us Monday through Friday 8:00 am to 5:00 pm ET or send an email to orders@advancedillumination.com.

Company Information

Advanced Illumination
440 State Garage Road, Rochester, VT 05767
Phone: 802.767.3830
Fax: 802.767.2636
Email: info@advancedillumination.com
Web: advancedillumination.com
© 2021 Advanced illumination Inc. All rights reserved