AL126 Series

High Dispersion Narrow Bar Lights

Product Highlights

- High dispersion and expandable compact bar light with a washdown option.
- Provides a narrower and less intense illumination area than the AL116.

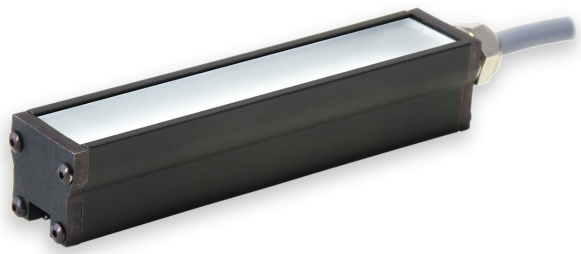

General Specifications

Electrical Specifications	Color	24V Current	All Other Controls
	365, 375, 385, 395, 405	0.06A per 2 inch	0.056A Max per 2 inch
	455, 470, 530, WHI	0.06A per 2 inch	0.08A Max per 2 inch
	590, 625	0.06A per 2 inch	0.10A Max per 2 inch
	850, 940	0.06A per 2 inch	0.10A Max per 2 inch
Normal Operating Temperature	0 - 60°C		
Weight	Per 4" (Sealed) 68.4g (2.4oz) (Nonsealed) 63.50mm (2.24oz)		
Standard Cable Information	2 m long -0/+150 mm (80" -0/+6") - 105°C rated PVC jacket, foil shield with drain.		
Photobiological Risk Factor	Exempt Applicable Wavelengths: 850, 940 Group 1 (Low-Risk) Applicable Wavelengths: 455, 470, 530, 590, 625, WHI Group 2 (Moderate-Risk) Applicable Wavelengths: 365, 375, 385, 395, 405		
Compliance	CE, RoHS, IEC 62471		
IP Rating	IP65 Sealed, IP50 Unsealed		
Lumen Maintenance	L70 = 50,000 Hours		

Part Number Key

Model	Emitting Length (in)	-	Peak Wavelength	Connector/ Control	Washdown Option	Light Conditioning Option	-	Alternative Connector
AL126	XX	-	XX	XX	X	X	-	XXX
AL126	02" increments from 02" to 40"		365 (UV)[3]	C1	W	D (Diffuser)		M8[1]
			375 (UV)[3]	C5				M12[1]
			385 (UV)[3]	IC		P (Polarization)[2]		
			395 (UV)[3]	I3				
			405 (UV)[3]	I3S				
			455 (royal blue)	I4				
			470 (blue)	24				
			530 (green)					
			590 (amber)					
			625 (red orange)					
			850 (IR)					
			940 (IR)					
			WHI (white)					

Example Part Numbers:
AL12602-WHIIC
AL12618-625C5W

[1] **Available with IC, I3, I3S, I4, and 24 V options only**
[2] **470 (blue) will reduce life of the polarizer**
[3] **Not available with (D) diffuser or (P) polarizer options**

Change Notice

PCN No: 144

Date Issued: February 22, 2018

Notice Type: Product Change

Type: Washdown Lights

Change Notification Summary

Advanced illumination (Ai) is improving the way we manufacture washdown lights which will change their outward appearance. We will be replacing the black cordstock with clear flowable silicon. This change will provide a more durable finish and will effect the following lights: AL116, AL126, AL143, AL179, AL295, BL128, QM116, QM126, LL174 and SL147.

Please contact your Ai Sales Representative if you have any questions.

Washdown Lights Flowable Silicon

PCN No: 124

Date Issued: June 3, 2016

Notice Type: Product Revision Change

Product Type: AL126

Change Notification Summary

In an effort to improve our products, Advanced illumination (Ai) will update the LEDs used in the AL126 design. This change will result in a brighter, more uniform light at the same price*. Customers may still buy the current revision of this model until September 16th of 2016. After that time, orders for these products will be converted to their respective AL126 Revison A models.

This LED change will result in additional wavelengths being available: 365nm, 375nm, 385nm, 395nm, 405nm, 455nm, 530nm, 590nm, 730nm, 850nm and 940nm. Additionally the white LED color temperture will be changing from 6100K to 5000K.

*Visable and IR wavelengths that did not exist will prior will be sold at the same list price as the original colors. UV wavelengths (365nm, 375nm, 385nm, 395nm & 405nm) will be sold at a higher price that will be released at the time of product introduction.

Orders for customized (dash numbers) versions of AL126 will be honored until January 27th of 2017. Ai will be actively working with customers for those products to simplify the transition.

Please contact your Ai Sales Representative if you have any questions.

PCN_124_AL126

Mechanical Specs

[NONSEALED]

AL126 LENGTH MATRIX	
PART #	LENGTH IN INCHES (mm)
AL12602	2.52 (66.6 mm)
AL12604	4.52 (117.3 mm)
AL12606	6.52 (168.2 mm)
AL12608	8.52 (219.0 mm)
AL12610	10.52 (269.8 mm)
AL12612	12.52 (320.6 mm)
AL12614	14.52 (371.4 mm)
AL12616	16.52 (422.2 mm)
AL12618	18.52 (473.0 mm)
AL12620	20.52 (523.8 mm)

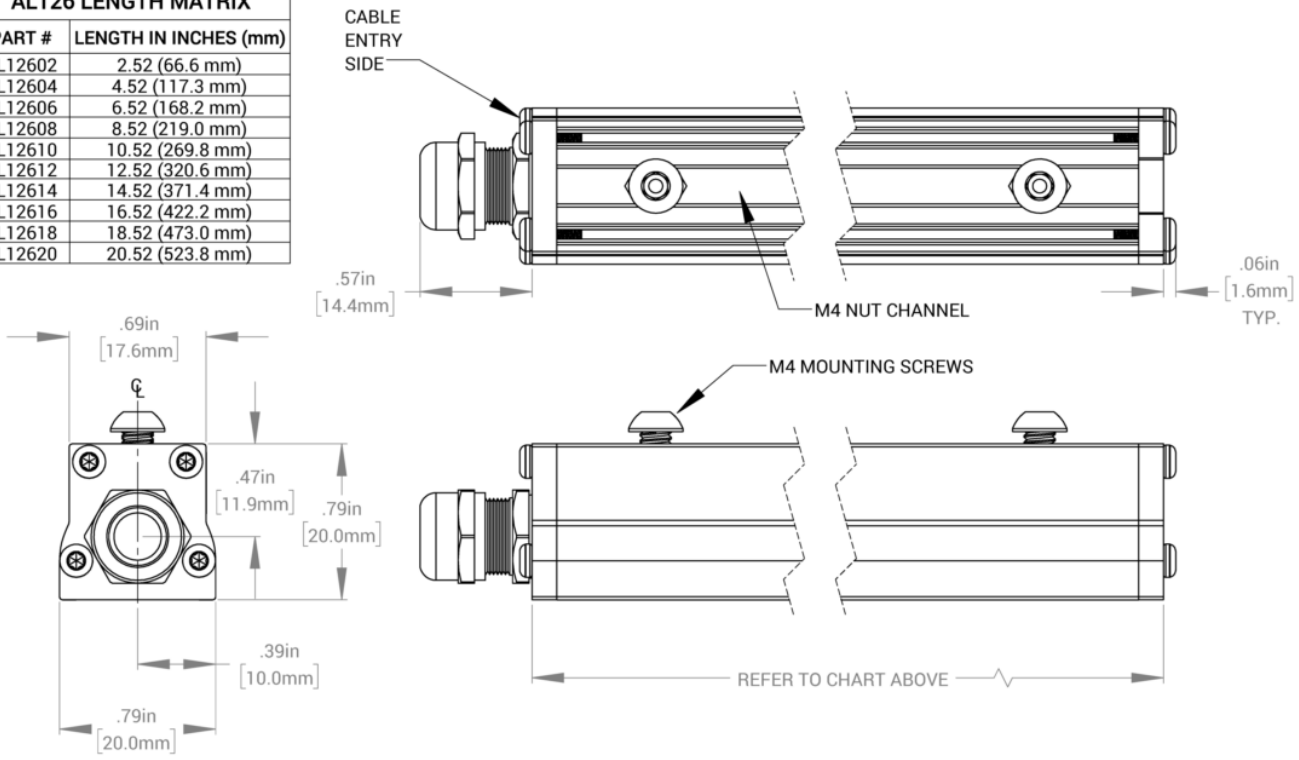

[SEALED]

AL126 LENGTH MATRIX	
PART #	LENGTH IN INCHES (mm)
AL12602	2.62 (66.6 mm)
AL12604	4.62 (117.3 mm)
AL12606	6.62 (168.2 mm)
AL12608	8.62 (219.0 mm)
AL12610	10.62 (269.8 mm)
AL12612	12.62 (320.6 mm)
AL12614	14.62 (371.4 mm)
AL12616	16.62 (422.2 mm)
AL12618	18.62 (473.0 mm)
AL12620	20.62 (523.8 mm)

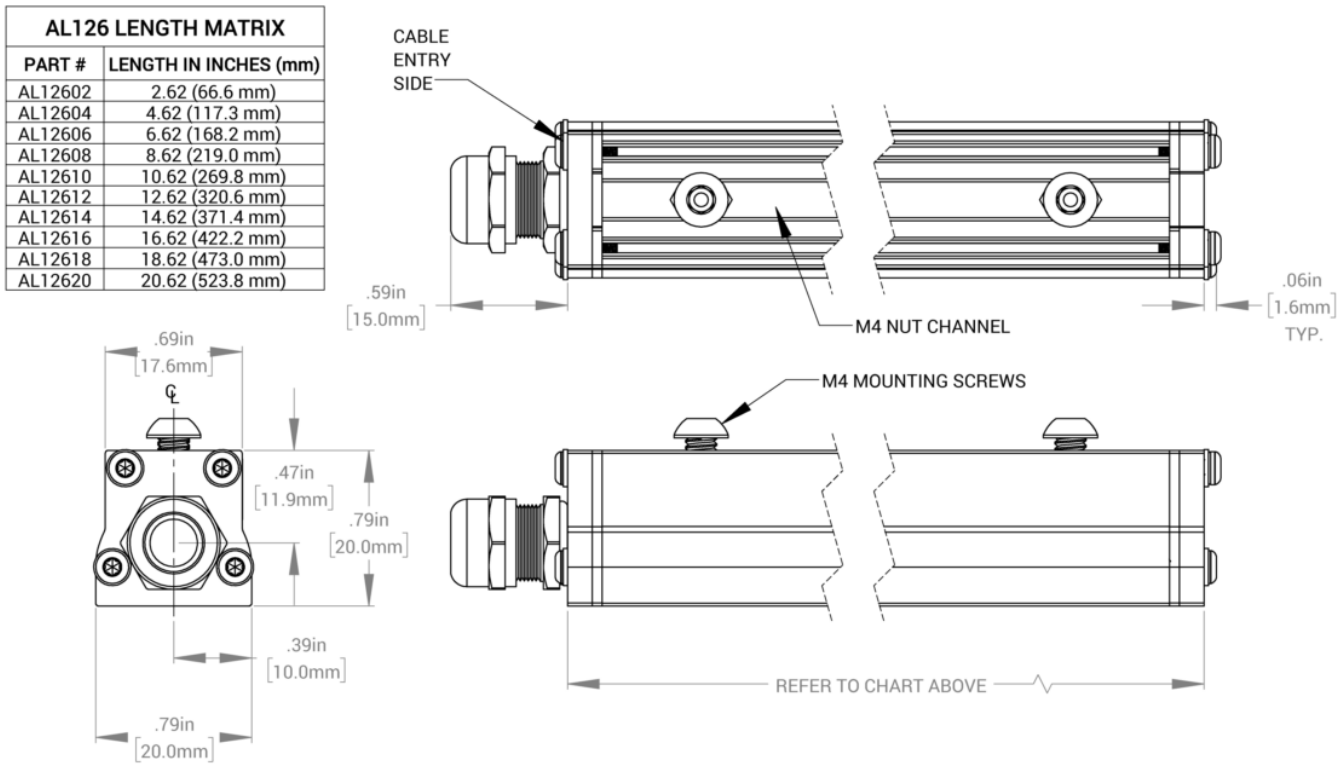

Electrical Specs

Standard Flying Lead Functions for 24V, IC, I3, I3S, and I4 Control Options

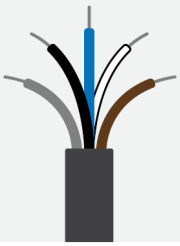

COLOR	24V FUNCTIONS	IC FUNCTIONS	I3/I3S FUNCTIONS	I4 FUNCTIONS
BROWN	24 V DC	24 V DC	24 V DC	24 V DC
WHITE	N/A	0-10 V ANALOG DIMMING	RESERVED	NPN/ACTIVE LOW TRIGGER
BLUE	DC GND	DC GND	DC GND	DC GND
BLACK	N/A	PNP/ACTIVE LOW GATE	PNP/ACTIVE HIGH TRIGGER	PNP/ACTIVE HIGH TRIGGER
GRAY	N/A	N/A	0-10 V ANALOG DIMMING	0-10 V ANALOG DIMMING

The functions listed above are applicable when this product is configured with built-in 24V, IC, I3, I3S, or I4 control, without the optional A-coded 5-position Male M12 or A-coded 4-position Male M8 connector.

M12 Connector Pinout Functions for 24V, IC, I3, I3S, and I4 Control Options

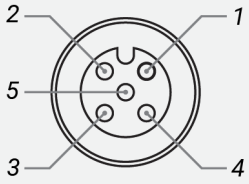

PIN	24V FUNCTIONS	IC FUNCTIONS	I3/I3S FUNCTIONS	I4 FUNCTIONS
1	24 V DC	24 V DC	24 V DC	24 V DC
2	N/A	0-10 V ANALOG DIMMING	RESERVED	NPN/ACTIVE LOW TRIGGER
3	DC GND	DC GND	DC GND	DC GND
4	N/A	PNP/ACTIVE LOW GATE	PNP/ACTIVE HIGH TRIGGER	PNP/ACTIVE HIGH TRIGGER
5	N/A	N/A	0-10 V ANALOG DIMMING	0-10 V ANALOG DIMMING

The functions listed above are only applicable when this product is configured with built-in 24V, IC, I3, I3S, or I4 control, with an A-coded 5-position Male M12 connector.

M8 Connector Pinout Functions for 24V, IC, I3, I3S, and I4 Control Options

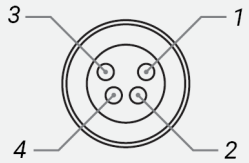

PIN	24V FUNCTIONS	IC FUNCTIONS	I3/I3S FUNCTIONS	I4 FUNCTIONS
1	24 V DC	24 V DC	24 V DC	24 V DC
2	N/A	0-10 V ANALOG DIMMING	0-10 V ANALOG DIMMING	0-10 V ANALOG DIMMING
3	DC GND	DC GND	DC GND	DC GND
4	N/A	PNP/ACTIVE LOW GATE	PNP/ACTIVE HIGH TRIGGER	PNP/ACTIVE HIGH TRIGGER

The functions listed above are only applicable when this product is configured with built-in 24V, IC, I3, I3S, or I4 control, with an A-coded 4-position Male M8 connector.

For details on operating configurations without built-in control (C1, C5, Q1, and Q4 control, when available), please refer to Advanced illumination's controller manuals.

Optical Specs

Intensity Distribution

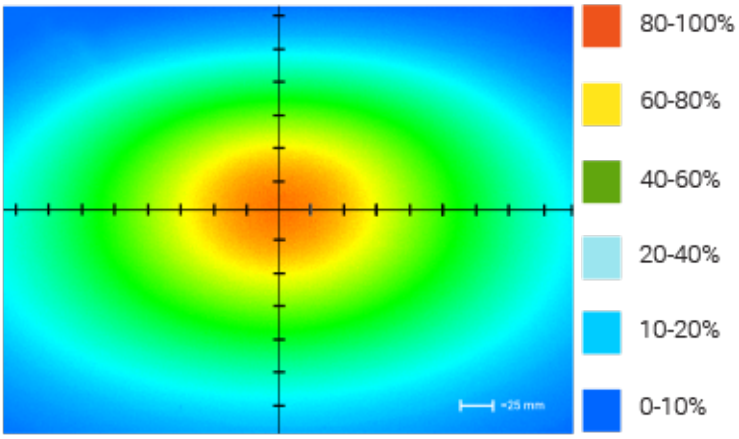

Optical measurement taken using AL126-WHIIC Rev. A @ 200 mm

Area of Illuminance & Intensity

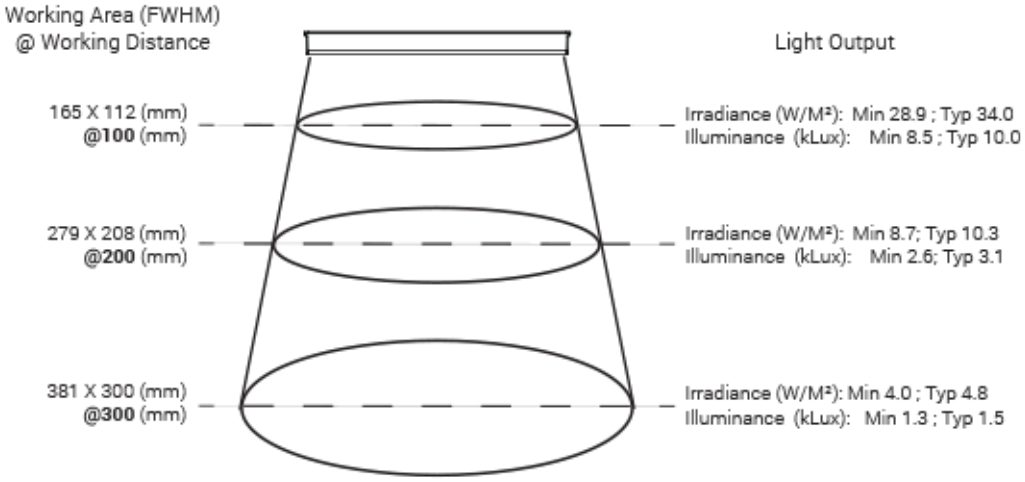

Control Specs

C1 CONNECTOR	C5 CONNECTOR	ICS 2 (IC)	ICS 3
For use with: **DCS Series Controllers** Strobe/Continuous Controllers	For use with: **Pulsar 320** High Power Strobe only Controller	In-line Continuous Controller Powered with: **24V Power Supply**	In-line Strobe/ Continuous Controller Default On Powered with: **24V Power Supply**

ICS 3S (I3S)	I4	24 VOLT
In-line Strobe/ Continuous Controller Default Off Powered with: **24V Power Supply**	In-line Strobe/ Continuous Controller Powered with: **24V Power Supply**	Flying/Tinned Leads Powered with: **24V Power Supply**

Warranty Information

Every Advanced illumination, Inc. (Ai) product is thoroughly inspected and tested before leaving the factory. Products are warranted to be free of defects in workmanship and materials for a period of FIVE YEARS from the original date of purchase. Should a defect develop during this period, customers may return the complete product, freight prepaid, to one of Ai's distributors or to the Ai factory. All product warranty returns require a Return Merchandise Authorization (RMA) number which is obtained from Customer Service. The RMA number must be clearly marked on the outside of the package. Ai will inspect the unit, and if a defect is found will, at our option, repair or replace the product without charge. Ai disclaims liability for any implied warranties, including implied warranties of "merchantability" and "fitness for a specific purpose." For products under warranty that have since been discontinued, Ai will make an effort to replace with equivalent parts; for circumstances that do not allow for equivalent replacement, Ai reserves the right to repair or replace these products with an updated version. Ai cannot be held responsible for the unauthorized or inappropriate use of its products. Any unauthorized repair or modifications will result in a voided warranty.
No Liability for Consequential Damages: In no event shall Ai be liable for any consequential, special, incidental, or indirect damages of any kind arising from the sale or use of the products.

Electromagnetic Compatibility

This product was tested and complies with the regulatory requirements and limits for electromagnetic compatibility (EMC) as stated in the product specifications. These requirements and limits are designed to provide reasonable protection against harmful interference only when the product is operated in its intended industrial electromagnetic environment. To minimize the potential for electromagnetic interference or unacceptable performance degradation, install and use this product in strict accordance with the instructions in the product documentation.

Customer Service

For information on existing orders, or to make an order adjustment, contact us Monday through Friday 8:00 am to 5:00 pm ET or send an email to orders@advancedillumination.com.

Company Information

Advanced Illumination
440 State Garage Road, Rochester, VT 05767
Phone: 802.767.3830
Fax: 802.767.2636
Email: info@advancedillumination.com
Web: advancedillumination.com
© 2021 Advanced illumination Inc. All rights reserved