AL143

2x3 Spot Light

Product Highlights

- Our AL143 2x3 spot light is ideal for medium working distances and comes available in a variety of wavelengths.



General Specifications

Electrical Specifications	Color	24V Current	All Other Controls
	365, 375, 385, 395, 405	0.36 A	0.36 A Max
	455, 470, 505, 530, WHI	0.36 A	0.48 A Max
	590, 625, 660, 730	0.36 A	0.46 A Max
	850	0.36 A	0.51 A Max
	940	0.36 A	0.32 A Max
Normal Operating Temperature	0 - 60°C		
Weight	141.8g (5oz)		
Standard Cable Information	2 m long -0/+150 mm (80" -0/+6") - 105°C rated PVC jacket, foil shield with drain.		
Photobiological Risk Factor	Exempt Applicable Wavelengths: 850, 940 Group 1 (Low-Risk) Applicable Wavelengths: 455, 470, 505, 530, 590, 625, 660, 730, WHI Group 2 (Moderate-Risk) Applicable Wavelengths: 365, 375, 385, 395, 405		
Compliance	CE, RoHS, IEC 62471		
IP Rating	IP65 Sealed, IP50 Unsealed		

Lumen Maintenance	L70 = 50,000 Hours

Part Number Key

Model	Lens Type	-	Peak Wavelength	Connector/ Control	Washdown Option	Light Conditioning Option	-	Alternative Connector
AL143	X	-	XXX	XX	X	X	-	XXX
AL143	N (Narrow)		365 (UV)[3]	C1	W	D (Diffuser)		M8[1]
	M (Medium)		375 (UV)[3]	C5		P[2] (Polarizer)		M12[1]
	W (Wide)		385 (UV)[3]	IC				
			395 (UV)[3]	I3				
			405 (violet)	I3S				
			455 (royal blue)	24				
			470 (blue)					
			505 (cyan)					
			530 (green)					
			590 (amber)					
			625 (red orange)					
			660 (red)					
			730 (IR)					
			850 (IR)					
			940 (IR)					
			WHI (white)					

Example Part Numbers:
AL143-WHIC1
AL142N-625ICD

Beam Angle (FWHM):
Narrow = 8°
Medium = 21°
Wide = 29°

[1] Available with IC, I3, I3S, I4 and 24 V options only
[2] 470 (blue) will reduce life of the polarizer
[3] Available with medium (M) lens option only; not available with polarizer

Electrical Specs

Standard Flying Lead Functions for 24V, IC, I3 and I3S Control Options

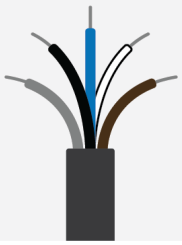

COLOR	24V FUNCTIONS	IC FUNCTIONS	I3/I3S FUNCTIONS
BROWN	24 V DC	24 V DC	24 V DC
WHITE	N/A	0-10 V ANALOG DIMMING	RESERVED
BLUE	DC GND	DC GND	DC GND
BLACK	N/A	PNP/ACTIVE LOW GATE	PNP/ACTIVE HIGH TRIGGER
GRAY	N/A	N/A	0-10 V ANALOG DIMMING

*The functions listed above are applicable when this product is configured with built-in 24V, IC, I3, or I3S control, **without** the optional A-coded 5-position Male M12 or A-coded 4-position Male M8 connector.*

M12 Connector Pinout Functions for 24V, IC, I3 and I3S Control Options

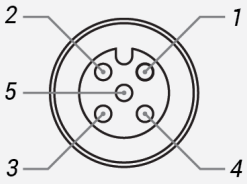

PIN	24V FUNCTIONS	IC FUNCTIONS	I3/I3S FUNCTIONS
1	24 V DC	24 V DC	24 V DC
2	N/A	0-10 V ANALOG DIMMING	RESERVED
3	DC GND	DC GND	DC GND
4	N/A	PNP/ACTIVE LOW GATE	PNP/ACTIVE HIGH TRIGGER
5	N/A	N/A	0-10 V ANALOG DIMMING

*The functions listed above are only applicable when this product is configured with built-in 24V, IC, I3, or I3S control, **with** an A-coded 5-position Male M12 connector.*

M8 Connector Pinout Functions for 24V, IC, I3 and I3S Control Options

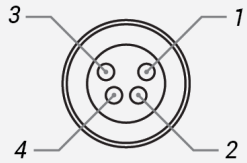

PIN	24V FUNCTIONS	IC FUNCTIONS	I3/I3S FUNCTIONS
1	24 V DC	24 V DC	24 V DC
2	N/A	0-10 V ANALOG DIMMING	0-10 V ANALOG DIMMING
3	DC GND	DC GND	DC GND
4	N/A	PNP/ACTIVE LOW GATE	PNP/ACTIVE HIGH TRIGGER

*The functions listed above are only applicable when this product is configured with built-in 24V, IC, I3, or I3S control, **with** an A-coded 4-position Male M8 connector.*

For details on operating configurations without built-in control (C1, C5, Q1, and Q4 control, when available), please refer to Advanced illumination's controller manuals.

Change Notice

PCN No: 144

Date Issued: February 22, 2018

Notice Type: Product Change

Type: Washdown Lights

Change Notification Summary

Advanced illumination (Ai) is improving the way we manufacture washdown lights which will change their outward appearance. We will be replacing the black cordstock with clear flowable silicon. This change will provide a more durable finish and will effect the following lights: AL116, AL126, AL143, AL179, AL295, BL128, QM116, QM126, LL174 and SL147.

Please contact your Ai Sales Representative if you have any questions.

Washdown Lights Flowable Silicon

PCN No: 122

Date Issued: May 13, 2016

Notice Type: Product Revision Change

Product Type: AL143

Change Notification Summary

In an effort to improve our products, Advanced illumination (Ai) will update the LEDs used in the AL143 design. This change will result in a brighter, more uniform light at the same price*. Customers may still buy the current revision of this model until August 5th of 2016. After that time, orders for these products will be converted to their respective AL143 Revison A models.

This LED change will result in additional wavelengths being available: 365nm, 375nm, 385nm, 405nm, 455nm, 505nm, 660nm, 730nm, and 940nm. Additionally the white LED color temperture will be changing from 6100K to 5500K.

*Pricing for IR wavelengths (730nm, 850nm & 940nm) will be reduced to the same price as visible wavelengths, while UV wavelengths (365nm, 375nm, 385nm & 395nm) will increase from $605 to $750.

Orders for customized (dash numbers) versions of AL143 will be honored until December 1st of 2016. Ai will be actively working with customers for those products to simplify the transition.

Please contact your Ai Sales Representative if you have any questions.

PCN 122 AL143

Mechanical Specs

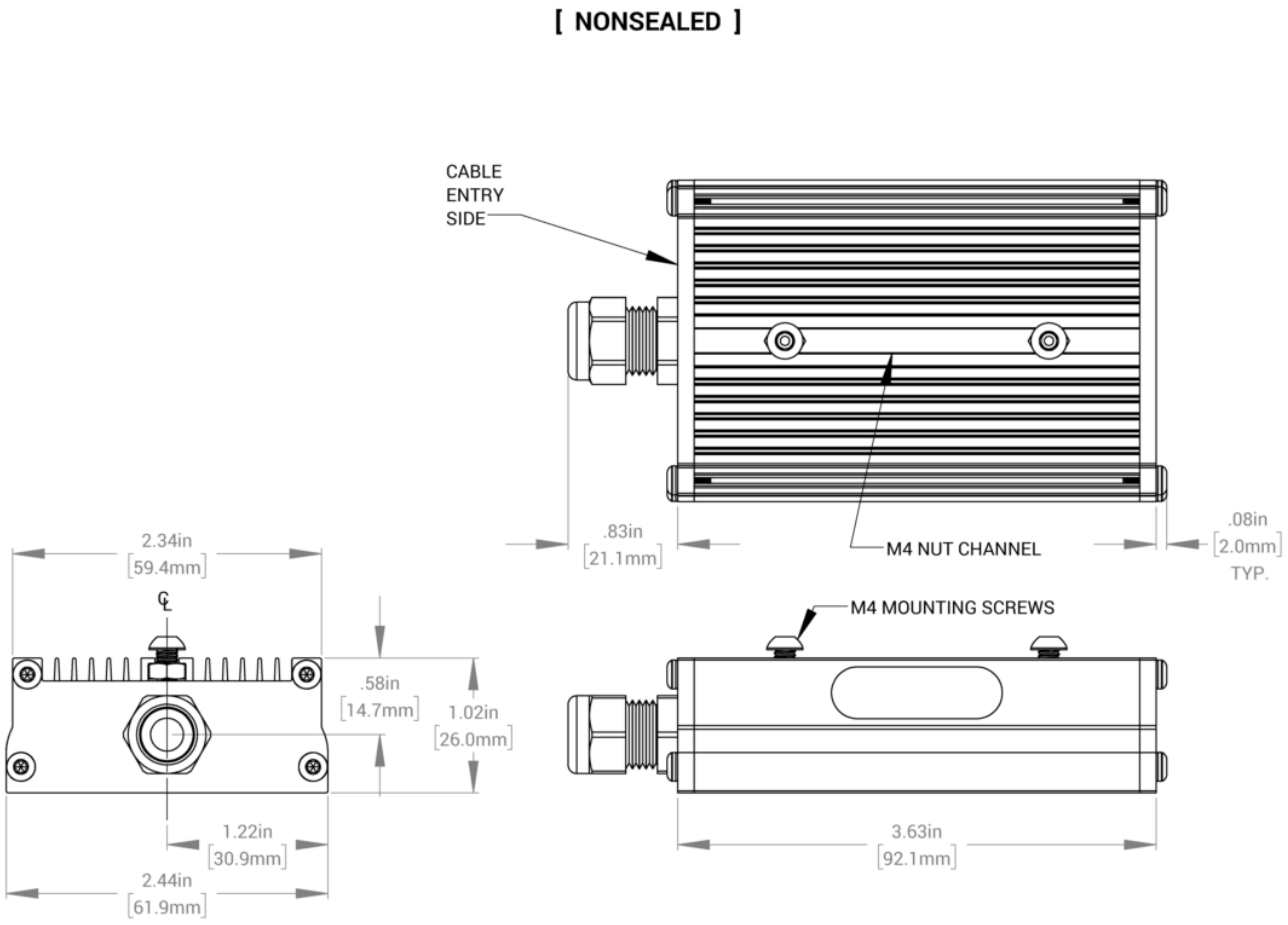

[SEALED]

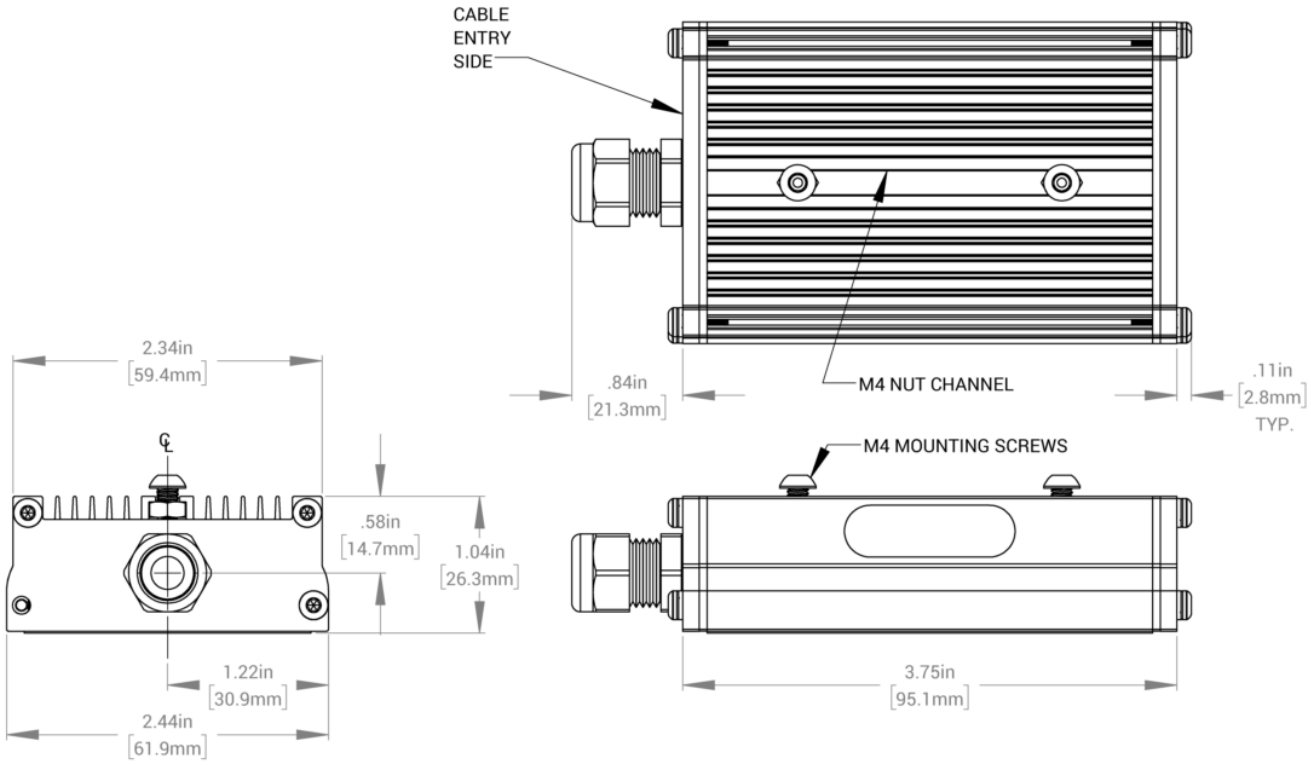

Optical Specs

Intensity Distribution

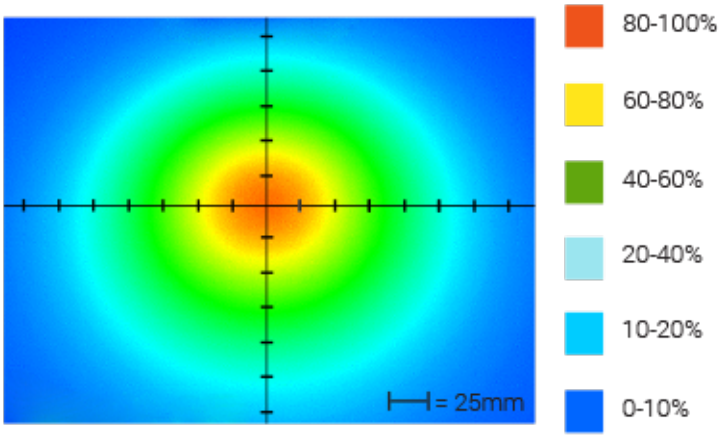

Optical measurement taken using AL143-WHIIC Rev. A @ 300 mm

Area of Illuminance & Intensity

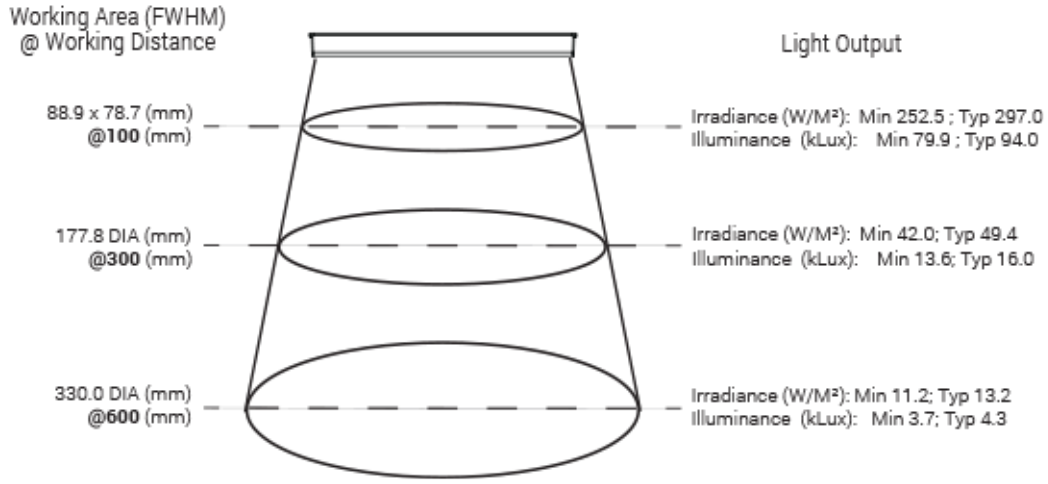

Control Specs

C1 Connector	C5 Connector	ICS 2 (IC)	ICS 3 (I3)	ICS 3S (I3S)	24
For use with: **DCS Series Controllers**	*For use with:* **Pulsar 320 Strobe Controller.**	Continous in-line controller *Powered with:* **24V power supply**	Combination strobe/continous in-line controller *Powered with:* **24V power supply**	Default-OFF strobe/continous in-line controller *Powered with:* **24V power supply**	Flying/tinned leads *Powered with:* **24V power supply**

Warranty Information

Every Advanced illumination, Inc. (Ai) product is thoroughly inspected and tested before leaving the factory. Products are warranted to be free of defects in workmanship and materials for a period of FIVE YEARS from the original date of purchase. Should a defect develop during this period, customers may return the complete product, freight prepaid, to one of Ai's distributors or to the Ai factory. All product warranty returns require a Return Merchandise Authorization (RMA) number which is obtained from Customer Service. The RMA number must be clearly marked on the outside of the package. Ai will inspect the unit, and if a defect is found will, at our option, repair or replace the product without charge. Ai disclaims liability for any implied warranties, including implied warranties of "merchantability" and "fitness for a specific purpose." For products under warranty that have since been discontinued, Ai will make an effort to replace with equivalent parts; for circumstances that do not allow for equivalent replacement, Ai reserves the right to repair or replace these products with an updated version. Ai cannot be held responsible for the unauthorized or inappropriate use of its products. Any unauthorized repair or modifications will result in a voided warranty.
No Liability for Consequential Damages: In no event shall Ai be liable for any consequential, special, incidental, or indirect damages of any kind arising from the sale or use of the products.

Electromagnetic Compatibility

This product was tested and complies with the regulatory requirements and limits for electromagnetic compatibility (EMC) as stated in the product specifications. These requirements and limits are designed to provide reasonable protection against harmful interference only when the product is operated in its intended industrial electromagnetic environment. To minimize the potential for electromagnetic interference or unacceptable performance degradation, install and use this product in strict accordance with the instructions in the product documentation.

Customer Service

For information on existing orders, or to make an order adjustment, contact us Monday through Friday 8:00 am to 5:00 pm ET or send an email to orders@advancedillumination.com.

Company Information

Advanced Illumination
440 State Garage Road, Rochester, VT 05767
Phone: 802.767.3830
Fax: 802.767.2636
Email: info@advancedillumination.com
Web: advancedillumination.com
© 2021 Advanced illumination Inc. All rights reserved