AL295 Series

MicroBrite™ Bar Lights

Product Highlights

- MicroBrite™ expandable bar lights deliver high performance in a compact form factor.
- Available in a broad range of wavelengths with expandable sizes in 3" (75mm) increments up to 18" (450mm).



General Specifications

Electrical Specifications	Color	24V Current	All Other Controls
	365, 375, 385, 395, 405	N/A	0.15A Max Per 75mm
	455, 470, 505, 530, 590, WHI	N/A	0.23A Max Per 75mm
	625, 660, 730	N/A	0.34A Max Per 75mm
	850, 940	N/A	0.27A Max Per 75mm
Normal Operating Temperature	0 - 60°C		
Weight	Varies by size; see page 2		
Standard Cable Information	2 m long -0/+150 mm (80" -0/+6") - 105°C rated PVC jacket, foil shield with drain.		
Photobiological Risk Factor	Exempt Applicable Wavelengths: 850, 940 Group 1 (Low-Risk) Applicable Wavelengths: 505, 530, 590, 625, 660, 730, WHI Group 2 (Moderate-Risk) Applicable Wavelengths: 365, 375, 385, 395, 405, 455, 470		
Compliance	CE, RoHS, IEC 62471		
IP Rating	IP50		
Lumen Maintenance	L70 = 50,000 Hours		

Part Number Key

Model	Lens Type	-	Emitting Length (mm)	Peak Wavelength	Connector/ Control	Light Conditioning Option	-	Alternative Connector
AL295	X	–	XX	XXX	XX	X	–	XXX
AL295	M (Medium)		075	365 (UV)[2]	C1	D (Diffuser)[3]		M8[1]
	W (Wide)		150	375 (UV)[2]	C5			M12[1]
			225	385 (UV)[2]	IC			
			300	395 (UV)[2]	I3			
			375	405 (UV)[2]	I3S			
			450	455 (royal blue)	I4			
			525	470 (blue)				
			600	505 (cyan)				
			675	530 (green)				
			750	590 (amber)				
			825	625 (red orange)				
			900	660 (red)				
			975	730 (IR)				
			1050	850 (IR)				
				940 (IR)				
				WHI (white)				

Example Part Numbers:
AL295-075WHIIC
AL295W-225625IC-M12

[1]Available with IC, I3, I3S, and I4 options only
[2]Not available with (W) wide lens option
[3]Not available with UV options

Mechanical Specs

AL295 SIZING CHART		
PART #	UNIT LENGTH	WINDOW LENGTH
AL295-0075	4.15in (105.4mm)	3.27in (83.1mm)
AL295-0150	7.15in (181.6mm)	6.27in (159.3mm)
AL295-0225	10.15in (257.8mm)	9.27in (235.5mm)
AL295-0300	13.15in (334.0mm)	12.27in (311.7mm)
AL295-0375	16.15in (410.2mm)	15.27in (387.9mm)
AL295-0450	19.15in (486.4mm)	18.27in (464.1mm)
AL295-0525	22.15in (562.6mm)	21.27in (540.3mm)
AL295-0600	25.15in (638.8mm)	24.27in (616.5mm)
AL295-0675	28.15in (715.0mm)	27.27in (692.7mm)
AL295-0750	31.15in (791.2mm)	30.27in (768.9mm)
AL295-0825	34.15in (867.4mm)	33.27in (845.1mm)
AL295-0900	37.15in (943.6mm)	36.27in (921.3mm)
AL295-0975	40.15in (1019.8mm)	39.27in (997.5mm)
AL295-1050	43.15in (1096.0mm)	42.27in (1073.7mm)

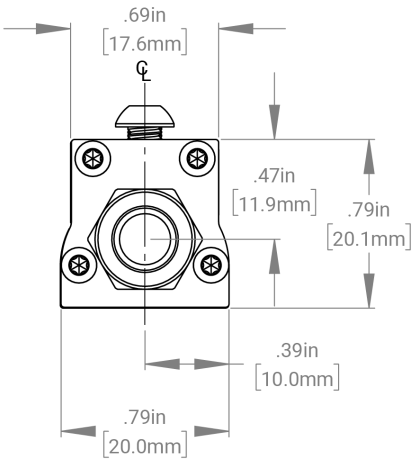

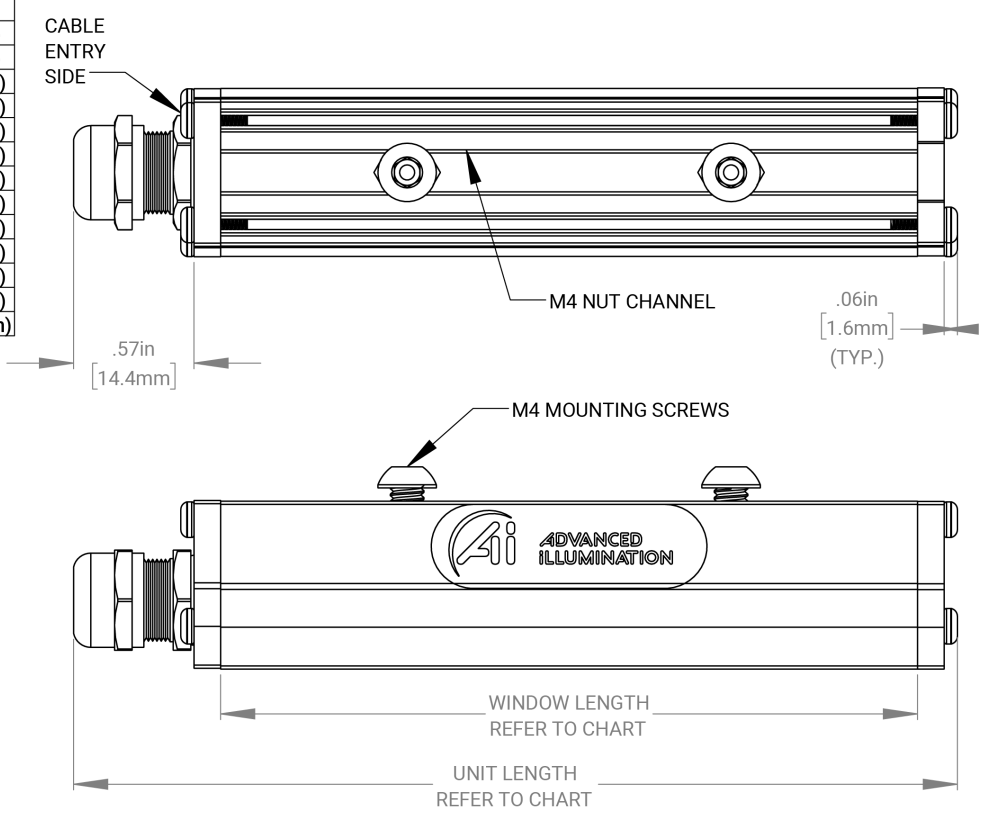

Change Notice

PCN No: 144

Date Issued: February 22, 2018

Notice Type: Product Change

Type: Washdown Lights

Change Notification Summary

Advanced illumination (Ai) is improving the way we manufacture washdown lights which will change their outward appearance. We will be replacing the black cordstock with clear flowable silicon. This change will provide a more durable finish and will effect the following lights: AL116, AL126, AL143, AL179, AL295, BL128, QM116, QM126, LL174 and SL147.

Please contact your Ai Sales Representative if you have any questions.

Washdown Lights Flowable Silicon

PCN No: 125

Date Issued: June 3, 2016

Notice Type: Product Revision Change

Product Type: AL295

Change Notification Summary

In an effort to improve our products, Advanced illumination (Ai) will update the LEDs used in the AL295 design. This change will result in a brighter, more uniform light at the same price*. Customers may still buy the current revision of this model until September 2th of 2016. After that time, orders for these products will be converted to their respective AL295 Revison A models.

This LED change will result in additional wavelengths being available: 365nm, 375nm, 385nm, 395nm, 405nm, 470nm, 505nm, 590nm, 660nm, 730nm, and 940nm. Additionally the white LED color temperture will be changing from 6100K to 5500K.

*UV wavelengths (365nm, 375nm, 385nm, 395nm & 405nm) will be sold a higher list price, which will be released at the time of product introduction.

Orders for customized (dash numbers) versions of AL295 will be honored until January 13th of 2017. Ai will be actively working with customers for those products to simplify the transition.

Please contact your Ai Sales Representative if you have any questions.

PCN_125_AL295

Optical Specs

Intensity Distribution

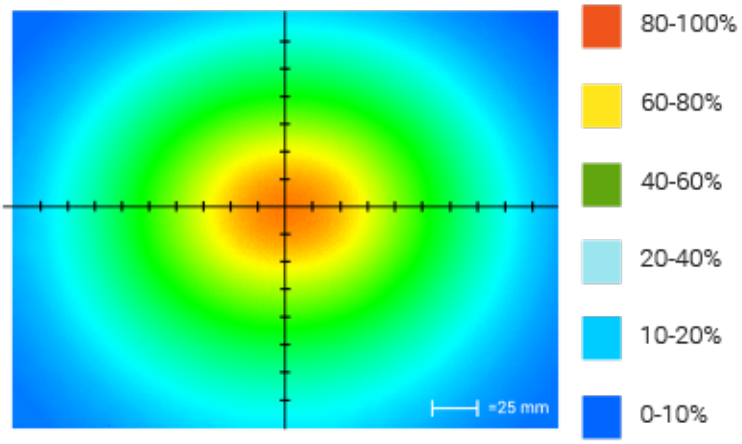

Optical measurement taken using AL295-150WHIIC Rev. A @ 300 mm

Area of Illuminance & Intensity

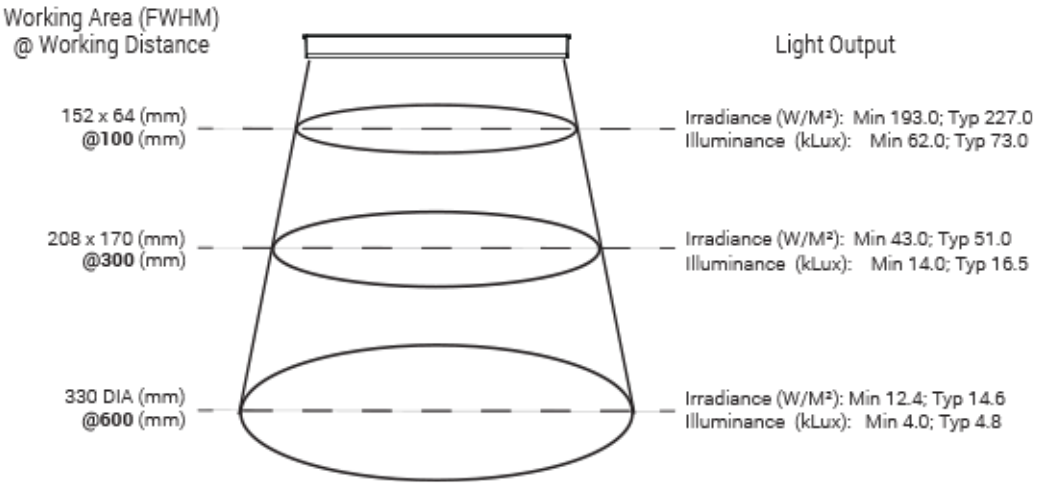

Electrical Specs

Standard Flying Lead Functions for IC, I3, I3S, and I4 Control Options

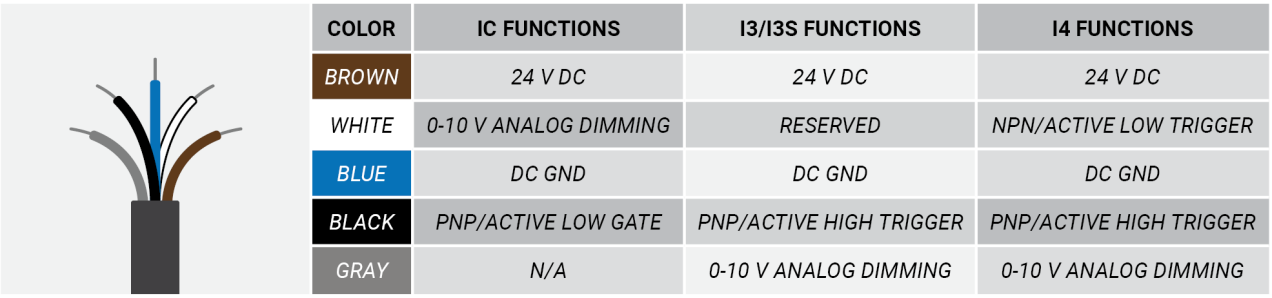

COLOR	IC FUNCTIONS	I3/I3S FUNCTIONS	I4 FUNCTIONS
BROWN	24 V DC	24 V DC	24 V DC
WHITE	0-10 V ANALOG DIMMING	RESERVED	NPN/ACTIVE LOW TRIGGER
BLUE	DC GND	DC GND	DC GND
BLACK	PNP/ACTIVE LOW GATE	PNP/ACTIVE HIGH TRIGGER	PNP/ACTIVE HIGH TRIGGER
GRAY	N/A	0-10 V ANALOG DIMMING	0-10 V ANALOG DIMMING

The functions listed above are applicable when this product is configured with built-in IC, I3, I3S, or I4 control, without the optional A-coded 5-position Male M12 or A-coded 4-position Male M8 connector.

M12 Connector Pinout Functions for IC, I3, I3S, and I4 Control Options

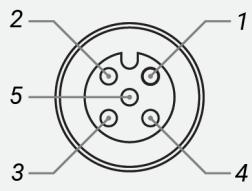

PIN	IC FUNCTIONS	I3/I3S FUNCTIONS	I4 FUNCTIONS
1	24 V DC	24 V DC	24 V DC
2	0-10 V ANALOG DIMMING	RESERVED	NPN/ACTIVE LOW TRIGGER
3	DC GND	DC GND	DC GND
4	PNP/ACTIVE LOW GATE	PNP/ACTIVE HIGH TRIGGER	PNP/ACTIVE HIGH TRIGGER
5	N/A	0-10 V ANALOG DIMMING	0-10 V ANALOG DIMMING

The functions listed above are only applicable when this product is configured with built-in IC, I3, I3S, or I4 control, with an A-coded 5-position Male M12 connector.

M8 Connector Pinout Functions for IC, I3, I3S, and I4 Control Options

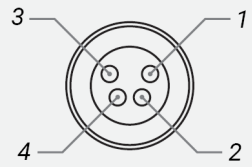

PIN	IC FUNCTIONS	I3/I3S FUNCTIONS	I4 FUNCTIONS
1	24 V DC	24 V DC	24 V DC
2	0-10 V ANALOG DIMMING	0-10 V ANALOG DIMMING	0-10 V ANALOG DIMMING
3	DC GND	DC GND	DC GND
4	PNP/ACTIVE LOW GATE	PNP/ACTIVE HIGH TRIGGER	PNP/ACTIVE HIGH TRIGGER

The functions listed above are only applicable when this product is configured with built-in IC, I3, I3S, or I4 control, with an A-coded 4-position Male M8 connector.

For details on operating configurations without built-in control (C1, C5, Q1, and Q4 control, when available), please refer to Advanced illumination's controller manuals.

Control Specs

C1 CONNECTOR	C5 CONNECTOR	ICS 2 (IC)	ICS 3
For use with: **DCS Series Controllers** Strobe/Continuous Controllers	For use with: **Pulsar 320** High Power Strobe only Controller	In-line Continuous Controller Powered with: **24V Power Supply**	In-line Strobe/ Continuous Controller Default On Powered with: **24V Power Supply**

ICS 3S (I3S)	I4
In-line Strobe/ Continuous Controller Default Off Powered with: **24V Power Supply**	In-line Strobe/ Continuous Controller Powered with: **24V Power Supply**

Warranty Information

Every Advanced illumination, Inc. (Ai) product is thoroughly inspected and tested before leaving the factory. Products are warranted to be free of defects in workmanship and materials for a period of FIVE YEARS from the original date of purchase. Should a defect develop during this period, customers may return the complete product, freight prepaid, to one of Ai's distributors or to the Ai factory. All product warranty returns require a Return Merchandise Authorization (RMA) number which is obtained from Customer Service. The RMA number must be clearly marked on the outside of the package. Ai will inspect the unit, and if a defect is found will, at our option, repair or replace the product without charge. Ai disclaims liability for any implied warranties, including implied warranties of "merchantability" and "fitness for a specific purpose." For products under warranty that have since been discontinued, Ai will make an effort to replace with equivalent parts; for circumstances that do not allow for equivalent replacement, Ai reserves the right to repair or replace these products with an updated version. Ai cannot be held responsible for the unauthorized or inappropriate use of its products. Any unauthorized repair or modifications will result in a voided warranty.
No Liability for Consequential Damages: In no event shall Ai be liable for any consequential, special, incidental, or indirect damages of any kind arising from the sale or use of the products.

Electromagnetic Compatibility

This product was tested and complies with the regulatory requirements and limits for electromagnetic compatibility (EMC) as stated in the product specifications. These requirements and limits are designed to provide reasonable protection against harmful interference only when the product is operated in its intended industrial electromagnetic environment. To minimize the potential for electromagnetic interference or unacceptable performance degradation, install and use this product in strict accordance with the instructions in the product documentation.

Customer Service

For information on existing orders, or to make an order adjustment, contact us Monday through Friday 8:00 am to 5:00 pm ET or send an email to orders@advancedillumination.com.

Company Information

Advanced Illumination
440 State Garage Road, Rochester, VT 05767
Phone: 802.767.3830
Fax: 802.767.2636
Email: info@advancedillumination.com
Web: advancedillumination.com
© 2021 Advanced illumination Inc. All rights reserved