BL138 Series

High Intensity Linear Backlights

Product Highlights

- Our High Intensity Linear Backlights offer 510 kLux output, perfect for back-lit, line-scanning applications.

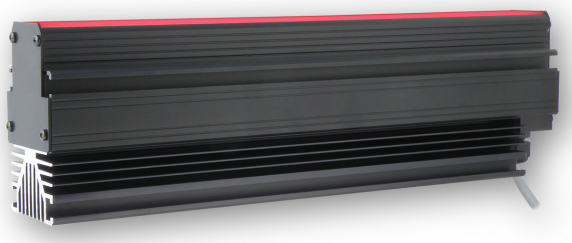

General Specifications

Electrical Specifications	Color	24V Current	All Other Controls
	850, RGB	0.64A per 6 inches	0.64A Max per 6 inches
	625	0.64A per 6 inches	0.64A Max per 6 inches
	455, 530, WHI	0.75A per 6 inches	0.75A Max per 6 inches
Normal Operating Temperature	0 - 60°C		
Weight	Per 12" - 1211.1g (42.72oz)		
Standard Cable Information	2 m long -0/+150 mm (80" -0/+6") - 105°C rated PVC jacket, foil shield with drain.		
Photobiological Risk Factor	Exempt Applicable Wavelengths: 850 Group 1 (Low-Risk) Applicable Wavelengths: 455, 530, 625, RGB, WHI		
Compliance	CE, RoHS, IEC 62471		
IP Rating	Unsealed - IP50		
Lumen Maintenance	L70 = 50,000 Hours		

Part Number Key

Model	Emitting Length (in)	–	Peak Wavelength	Connector/ Control
BL138	XX	-	XXX	XXX
BL138	06" increments from 06" to 96" 03" model also available		455 (blue) 530 (green) 625 (red) 850 (IR) RGB (all colors)[1] WHI (white)	C1 C5 IC[2] 24

EX:
BL13806-455C1
BL13824-625IC

[1] Not available in IC
[2] IC option not available with 03" model

See website product page for in-stock product numbers.

Shipping:
Stock Products: within three days
Build-to-Order Products: within one to three weeks

Mechanical Specs

BL138 LENGTH MATRIX	
PART #	LENGTH IN INCHES (mm)
BL13803	3.0 (76 mm)
BL13806	6.0 (152 mm)
BL13812	12.0 (305 mm)
BL13818	18.0 (457 mm)
BL13824	24.0 (610 mm)
BL13830	30.0 (762 mm)
6" INCREMENTS UP TO MAX OF 90"	

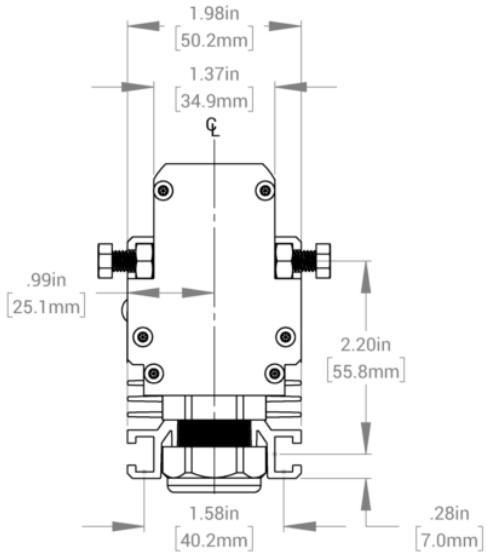

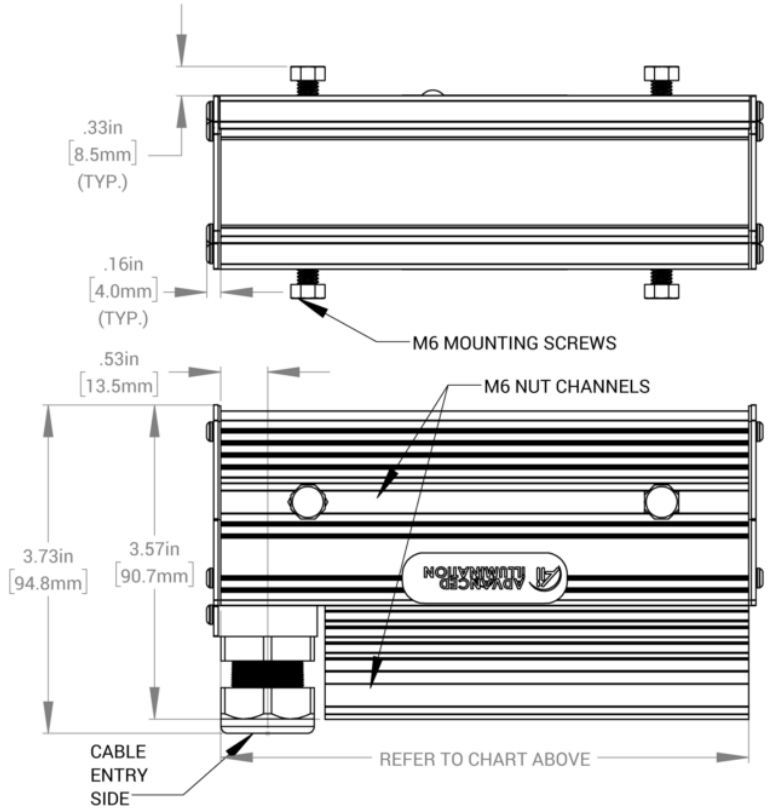

Optical Specs

Area of Illuminance & Intensity

Working Area (FWHM)
@ Working Distance

297.2 X 17.8 (mm)
@Surface

Light Output

Irradiance (W/M²): Min 1173; Typ 1380
Illuminance (kLux): Min 433.5 ; Typ 510

Intensity Distribution

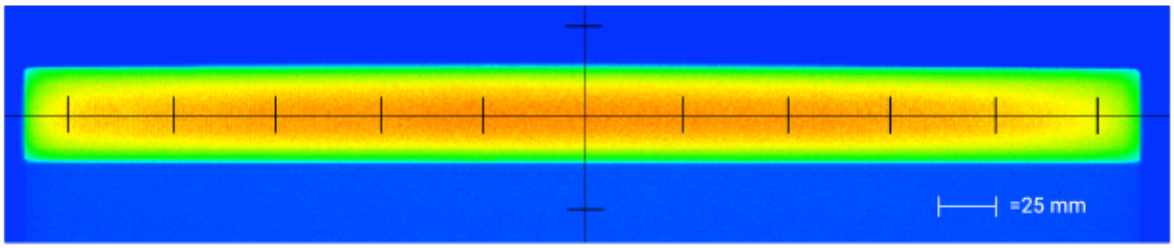

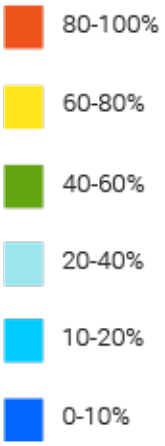

Optical measurement taken using BL13812-WHI24

Electrical Specs

24 Volt

Function	Wire Color
+24v DC	Brown
0-10v DC Analog Control	White
GND	Blue
N/A	Black

The entire light's intensity can be controlled via external 0-10 V analog controller using the white wire

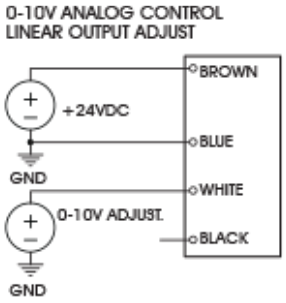

The IC option allows for control of intensity on each 6" (152mm) section of BL138, BL168, LL137 and LL167 only. Fig. 1 shows 5 segments of 6" (152mm) BL138 with IC adjustment holes.

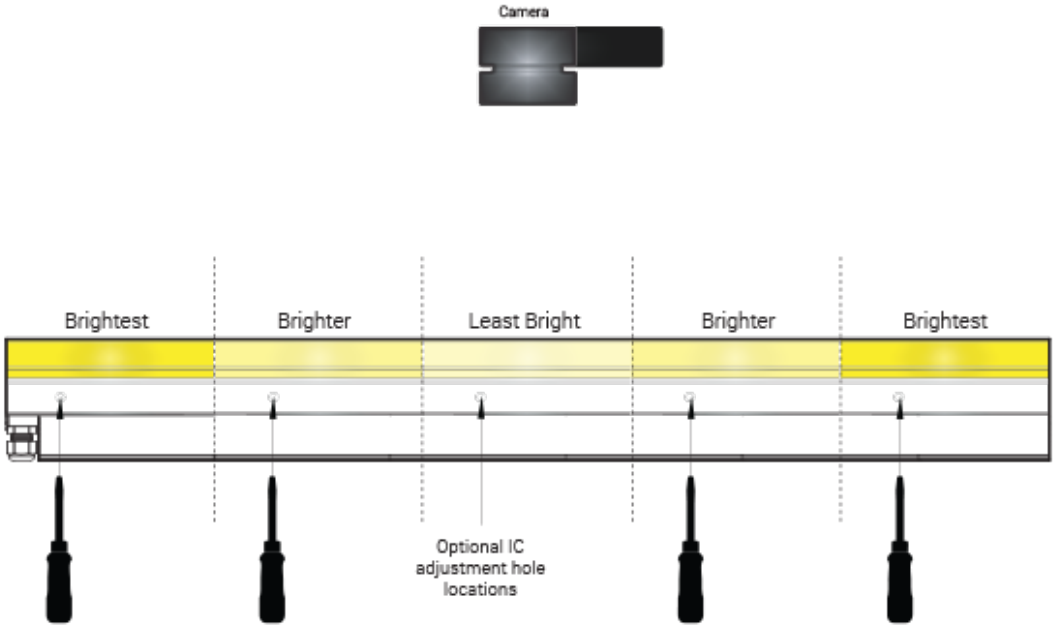

(fig. 1)

Controlling each 6" (152mm) section independently and making the center of the line less bright and the outside of the immediate camera viewing radius brighter ultimately results in better imaging.

Better imaging occurs because the camera can see very well in it's area of focus, but outside that area the camera doesn't focus as well without brighter illumination.

Ai recommends using IC adjustment holes for aforementioned lights over 24" (610mm) long.

Control Specs

C1 Connector	IC	24
For use with: **DCS Series Controllers**	Please see page 4 for IC information	Flying/tinned leads *Powered with:* **24V power supply**

Warranty Information

Every Advanced illumination, Inc. (Ai) product is thoroughly inspected and tested before leaving the factory. Products are warranted to be free of defects in workmanship and materials for a period of FIVE YEARS from the original date of purchase. Should a defect develop during this period, customers may return the complete product, freight prepaid, to one of Ai's distributors or to the Ai factory. All product warranty returns require a Return Merchandise Authorization (RMA) number which is obtained from Customer Service. The RMA number must be clearly marked on the outside of the package. Ai will inspect the unit, and if a defect is found will, at our option, repair or replace the product without charge. Ai disclaims liability for any implied warranties, including implied warranties of "merchantability" and "fitness for a specific purpose." For products under warranty that have since been discontinued, Ai will make an effort to replace with equivalent parts; for circumstances that do not allow for equivalent replacement, Ai reserves the right to repair or replace these products with an updated version. Ai cannot be held responsible for the unauthorized or inappropriate use of its products. Any unauthorized repair or modifications will result in a voided warranty.
No Liability for Consequential Damages: In no event shall Ai be liable for any consequential, special, incidental, or indirect damages of any kind arising from the sale or use of the products.

Electromagnetic Compatibility

This product was tested and complies with the regulatory requirements and limits for electromagnetic compatibility (EMC) as stated in the product specifications. These requirements and limits are designed to provide reasonable protection against harmful interference only when the product is operated in its intended industrial electromagnetic environment. To minimize the potential for electromagnetic interference or unacceptable performance degradation, install and use this product in strict accordance with the instructions in the product documentation.

Customer Service

For information on existing orders, or to make an order adjustment, contact us Monday through Friday 8:00 am to 5:00 pm ET or send an email to orders@advancedillumination.com.

Company Information

Advanced Illumination
440 State Garage Road, Rochester, VT 05767
Phone: 802.767.3830
Fax: 802.767.2636
Email: info@advancedillumination.com
Web: advancedillumination.com
© 2021 Advanced illumination Inc. All rights reserved