ADVANCED ILLUMINATION

DL097

Medium Dome Light

Product Highlights

- This Medium size Dome Light is available in a wide range of wavelengths including a 3 channel, RGB configuration.
- Rugged, cast aluminum housing has an outer diameter of 8.4" (213mm) and an inner, working diameter of 6.1" (155mm).



General Specifications

Electrical Specifications	Color	24V Current	All Other Controls
	RGB	0.72A	TBD
	455, WHI	0.72A	1.08A Max
	470, 505, 530, 590	0.72A	1.01A Max
	625, 660, 730, 880, 940	0.72A	0.76A Max
Normal Operating Temperature	0 - 60°C		
Weight	1369.9g (48.32oz) (3.02lb)		
Standard Cable Information	2 m long -0/+150 mm (80" -0/+6") - 105°C rated PVC jacket, foil shield with drain.		
Photobiological Risk Factor	Exempt Applicable Wavelengths: 850, 940 Group 1 (Low-Risk) Applicable Wavelengths: 455, 505, 530, 590, 625, 660, 730, WHI, RGB Group 2 (Moderate-Risk) Applicable Wavelengths: 470		
Compliance	CE, RoHS, IEC 62471		
IP Rating	Not Rated		
Lumen Maintenance	L70 = 50,000 Hours		

Part Number Key

Model	–	Peak Wavelength	Connector/ Control	–	Alternative Connector
DL097	–	XXX	XX	–	XXX
DL097		455 (royal blue)	C1		M8[1]
		470 (blue)	C5		M12[1]
		505 (cyan)	IC		
		530 (green)	I3		
		590 (amber)	I3S		
		625 (red orange)	24		
		660 (red)			
		730 (IR)			
		850 (IR)			
		940 (IR)			
		WHI (white)			
		RGB (all colors)[2]			

EX:
DL097-470C5
DL097-625I3-M12

[1] Available with IC, I3, I3S, and 24 V options only
[2] Available with C1 and 24 V options only

See website product page for in-stock product numbers.

Shipping:
Stock Products: within three days
Build-to-Order Products: within one to three weeks

Mechanical Specs

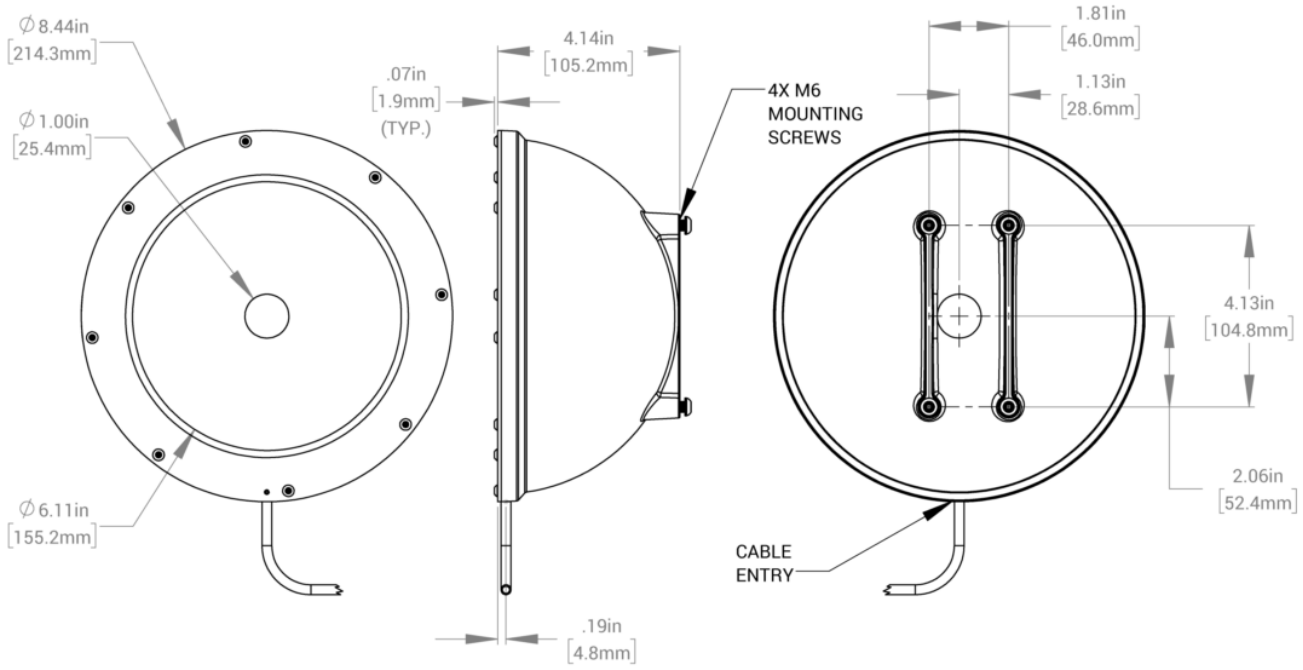

Change Notice

PCN No: 130

Date Issued: June 24, 2016

Notice Type: Product Revision Change

Product Type: DL097

Change Notification Summary

In an effort to improve our products, Advanced illumination (Ai) will update the LEDs used in the DL097 design. This

change will result in a brighter, more uniform light at the same price. Customers may still buy the current revision of this model until September 23rd of 2016. After that time, orders for these products will be converted to their respective DL097 Revison A models.

This LED change will result in additional wavelengths being available: 455nm, 505nm, 590nm, 660nm, 730nm and 940nm.

Additionally the white LED color temperture will be changing from 6100K to 5500K. Orders for customized (dash numbers) versions of DL097 will be honored until March 17th of 2017. Ai will be actively working with customers for those products to simplify the transition.

Please contact your Ai Sales Representative if you have any questions.

PCN 130 DL097

Control Specs

C1 Connector	C2 Connector	C5 Connector	IC	I3	24
For use with: **DCS Series Controllers**	*For use with:* **Legacy Controllers** (Not recommended for new applications)	*For use with:* **Pulsar 320 Strobe Controller.**	Continous in-line controller *Powered with:* **24V power supply**	Combination strobe/continous in-line controller *Powered with:* **24V power supply**	Flying/tinned leads *Powered with:* **24V power supply**

Optical Specs

Area of Illuminance & Intensity

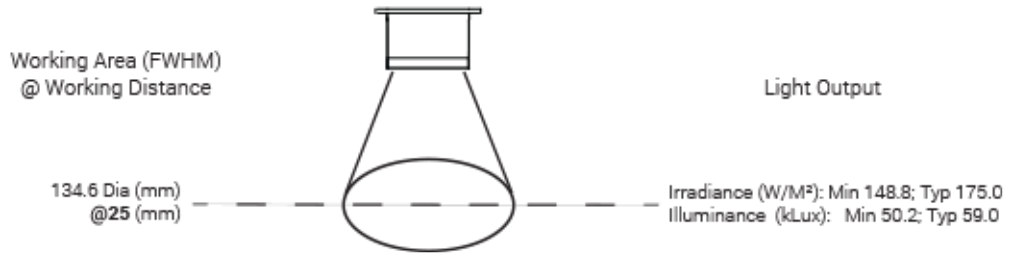

Intensity Distribution

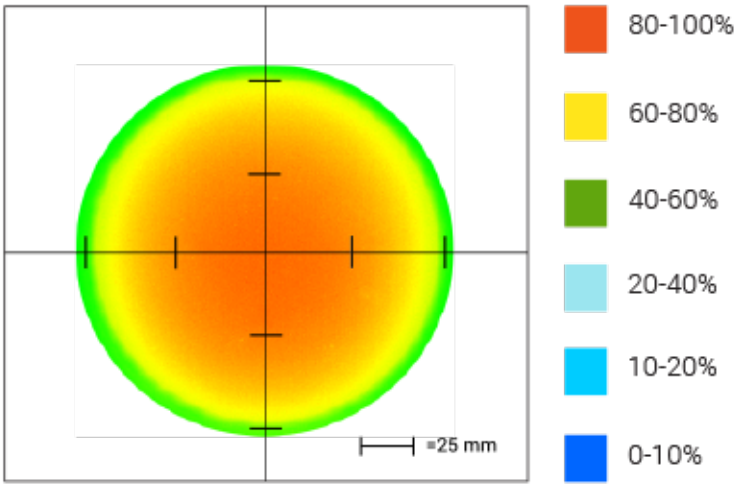

Optical measurement taken using DL097-WHIIC Rev. A @ 25 mm

Electrical Specs

Standard Flying Lead Functions for IC, I3 and I3S Control Options

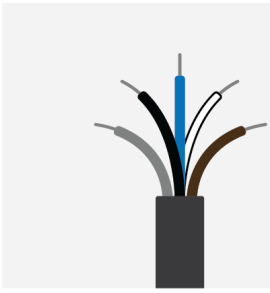

COLOR	IC FUNCTIONS	I3/I3S FUNCTIONS
BROWN	24 V DC	24 V DC
WHITE	0-10 V ANALOG DIMMING	RESERVED
BLUE	DC GND	DC GND
BLACK	PNP/ACTIVE LOW GATE	PNP/ACTIVE HIGH TRIGGER
GRAY	N/A	0-10 V ANALOG DIMMING

*The functions listed above are applicable when this product is configured with built-in IC, I3, or I3S control, **without** the optional A-coded 5-position Male M12 or A-coded 4-position Male M8 connector.*

M12 Connector Pinout Functions for IC, I3 and I3S Control Options

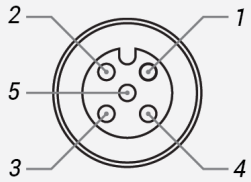

PIN	IC FUNCTIONS	I3/I3S FUNCTIONS
1	24 V DC	24 V DC
2	0-10 V ANALOG DIMMING	RESERVED
3	DC GND	DC GND
4	PNP/ACTIVE LOW GATE	PNP/ACTIVE HIGH TRIGGER
5	N/A	0-10 V ANALOG DIMMING

*The functions listed above are only applicable when this product is configured with built-in IC, I3, or I3S control, **with** an A-coded 5-position Male M12 connector.*

M8 Connector Pinout Functions for IC, I3 and I3S Control Options

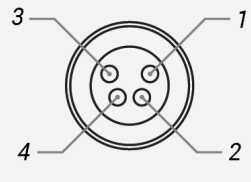

PIN	IC FUNCTIONS	I3/I3S FUNCTIONS
1	24 V DC	24 V DC
2	0-10 V ANALOG DIMMING	0-10 V ANALOG DIMMING
3	DC GND	DC GND
4	PNP/ACTIVE LOW GATE	PNP/ACTIVE HIGH TRIGGER

*The functions listed above are only applicable when this product is configured with built-in IC, I3, or I3S control, **with** an A-coded 4-position Male M8 connector.*

For details on operating configurations without built-in control (C1, C5, Q1, and Q4 control, when available), please refer to Advanced illumination's controller manuals.

Warranty Information

Every Advanced illumination, Inc. (Ai) product is thoroughly inspected and tested before leaving the factory. Products are warranted to be free of defects in workmanship and materials for a period of FIVE YEARS from the original date of purchase. Should a defect develop during this period, customers may return the complete product, freight prepaid, to one of Ai's distributors or to the Ai factory. All product warranty returns require a Return Merchandise Authorization (RMA) number which is obtained from Customer Service. The RMA number must be clearly marked on the outside of the package. Ai will inspect the unit, and if a defect is found will, at our option, repair or replace the product without charge. Ai disclaims liability for any implied warranties, including implied warranties of "merchantability" and "fitness for a specific purpose." For products under warranty that have since been discontinued, Ai will make an effort to replace with equivalent parts; for circumstances that do not allow for equivalent replacement, Ai reserves the right to repair or replace these products with an updated version. Ai cannot be held responsible for the unauthorized or inappropriate use of its products. Any unauthorized repair or modifications will result in a voided warranty.
No Liability for Consequential Damages: In no event shall Ai be liable for any consequential, special, incidental, or indirect damages of any kind arising from the sale or use of the products.

Electromagnetic Compatibility

This product was tested and complies with the regulatory requirements and limits for electromagnetic compatibility (EMC) as stated in the product specifications. These requirements and limits are designed to provide reasonable protection against harmful interference only when the product is operated in its intended industrial electromagnetic environment. To minimize the potential for electromagnetic interference or unacceptable performance degradation, install and use this product in strict accordance with the instructions in the product documentation.

Customer Service

For information on existing orders, or to make an order adjustment, contact us Monday through Friday 8:00 am to 5:00 pm ET or send an email to orders@advancedillumination.com.

Company Information

Advanced Illumination
440 State Garage Road, Rochester, VT 05767
Phone: 802.767.3830
Fax: 802.767.2636
Email: info@advancedillumination.com
Web: advancedillumination.com
© 2021 Advanced illumination Inc. All rights reserved