DL151 Series

Narrow Linear Diffuse Lights

Product Highlights

- The Narrow Linear Diffuse Light series is ideal for precision scanning of highly reflective materials.



General Specifications

Electrical Specifications	Color	24V Current	All Other Controls
	455, 470, 530, WHI	0.12A per 2"	0.14A per 2"
	590, 625	0.12A per 2"	0.10A per 2"
	850, 940	0.12A per 2"	0.11A per 2"
Normal Operating Temperature	0 - 60°C		
Weight	12" Unit = 421g (14.9oz)		
Standard Cable Information	2 m long -0/+150 mm (80" -0/+6") - 105°C rated PVC jacket, foil shield with drain.		
Photobiological Risk Factor	Exempt Applicable Wavelengths: 850, 940 Group 1 (Low-Risk) Applicable Wavelengths: 455, 470, 530, 590, 625, WHI		
Compliance	CE, RoHS, IEC 62471		
IP Rating	Not Rated		
Lumen Maintenance	L70 = 50,000 Hours		

Part Number Key

Model	Emitting Length (in)	-	Peak Wavelength	Connector/Control	-	Alternative Connector
DL151	XX	–	XXX	XX	–	XXX
DL151	02” increments from 02” to 70”		455 (royal blue)	C1		M12[1]
			470 (blue)	C5		M8[1]
			530 (green)	IC		
			590 (amber)	I3		
			625 (red orange)	I3S		
			850 (IR)	I4		
			940 (IR)	24		
			WHI (white)			

Example Part Numbers:
DL15112-625C1
DL15106-WHII3

[1]Available with IC, I3, I3S, I4, and 24 V options only

Electrical Specs

Standard Flying Lead Functions for 24V, IC, I3, I3S, and I4 Control Options

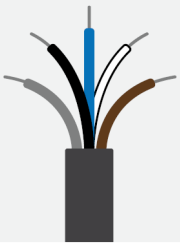

COLOR	24V FUNCTIONS	IC FUNCTIONS	I3/I3S FUNCTIONS	I4 FUNCTIONS
BROWN	24 V DC	24 V DC	24 V DC	24 V DC
WHITE	N/A	0-10 V ANALOG DIMMING	RESERVED	NPN/ACTIVE LOW TRIGGER
BLUE	DC GND	DC GND	DC GND	DC GND
BLACK	N/A	PNP/ACTIVE LOW GATE	PNP/ACTIVE HIGH TRIGGER	PNP/ACTIVE HIGH TRIGGER
GRAY	N/A	N/A	0-10 V ANALOG DIMMING	0-10 V ANALOG DIMMING

The functions listed above are applicable when this product is configured with built-in 24V, IC, I3, I3S, or I4 control, without the optional A-coded 5-position Male M12 or A-coded 4-position Male M8 connector.

M12 Connector Pinout Functions for 24V, IC, I3, I3S, and I4 Control Options

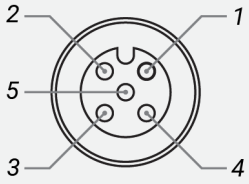

PIN	24V FUNCTIONS	IC FUNCTIONS	I3/I3S FUNCTIONS	I4 FUNCTIONS
1	24 V DC	24 V DC	24 V DC	24 V DC
2	N/A	0-10 V ANALOG DIMMING	RESERVED	NPN/ACTIVE LOW TRIGGER
3	DC GND	DC GND	DC GND	DC GND
4	N/A	PNP/ACTIVE LOW GATE	PNP/ACTIVE HIGH TRIGGER	PNP/ACTIVE HIGH TRIGGER
5	N/A	N/A	0-10 V ANALOG DIMMING	0-10 V ANALOG DIMMING

The functions listed above are only applicable when this product is configured with built-in 24V, IC, I3, I3S, or I4 control, with an A-coded 5-position Male M12 connector.

M8 Connector Pinout Functions for 24V, IC, I3, I3S, and I4 Control Options

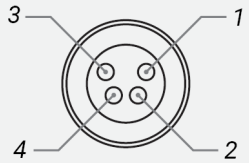

PIN	24V FUNCTIONS	IC FUNCTIONS	I3/I3S FUNCTIONS	I4 FUNCTIONS
1	24 V DC	24 V DC	24 V DC	24 V DC
2	N/A	0-10 V ANALOG DIMMING	0-10 V ANALOG DIMMING	0-10 V ANALOG DIMMING
3	DC GND	DC GND	DC GND	DC GND
4	N/A	PNP/ACTIVE LOW GATE	PNP/ACTIVE HIGH TRIGGER	PNP/ACTIVE HIGH TRIGGER

The functions listed above are only applicable when this product is configured with built-in 24V, IC, I3, I3S, or I4 control, with an A-coded 4-position Male M8 connector.

For details on operating configurations without built-in control (C1, C5, Q1, and Q4 control, when available), please refer to Advanced illumination's controller manuals.

Control Specs

C1 CONNECTOR	C5 CONNECTOR	ICS 2 (IC)	ICS 3
For use with: **DCS Series Controllers** Strobe/Continuous Controllers	For use with: **Pulsar 320** High Power Strobe only Controller	In-line Continuous Controller Powered with: **24V Power Supply**	In-line Strobe/ Continuous Controller Default On Powered with: **24V Power Supply**

ICS 3S (I3S)	I4	24 VOLT
In-line Strobe/ Continuous Controller Default Off Powered with: **24V Power Supply**	In-line Strobe/ Continuous Controller Powered with: **24V Power Supply**	Flying/Tinned Leads Powered with: **24V Power Supply**

Change Notice

PCN No: 138

Date Issued: 7/11/17

Notice Type: Product Revision Change

Product Type: DL151

Change Notification Summary

In an effort to improve our products, Advanced illumination (Ai) will update the LEDs used in the DL151 design. This change will result in a brighter, more uniform light at the same price*. Customers may still buy the current revision of this model until October 13th, 2017. After that time, orders for these products will be converted to their respective DL151 Revison A models.

This LED change will result in additional wavelengths being available: 455nm, 505nm, 660nm, 730nm, and 940nm.

*Visable and IR wavelengths that did not exist will prior will be sold at the same list price as similar wavelengths.

Orders for customized (dash numbers) versions of DL151 will be honored until January 12th, 2018. Ai will be actively working with customers for those products to simplify the transition.

Please contact your Ai Sales Representative if you have any questions.

PCN 138 DL151

Optical Specs

Intensity Distribution

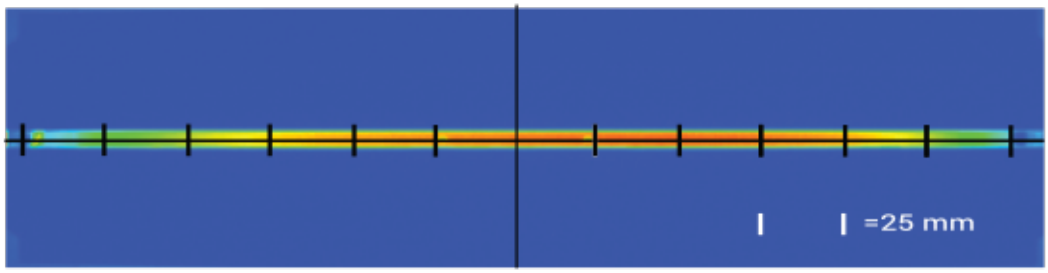

0-10% 10-20% 20-40% 40-60% 60-80% 80-100%

Optical measurement taken using DL15112-WHIIC @ 25mm

Area of Illuminance & Intensity

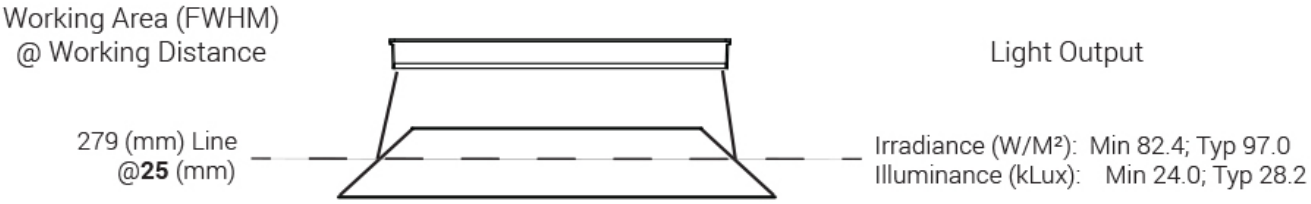

Mechanical Specs

DL151 SIZING CHART		
PART #	UNIT LENGTH	WINDOW LENGTH
DL15102	2.68in (68.1mm)	2.25in (57.2mm)
DL15104	4.68in (118.9mm)	4.25in (108.0mm)
DL15106	6.68in (169.7mm)	6.25in (158.8mm)
DL15108	8.68in (220.5mm)	8.25in (209.6mm)
DL15110	10.68in (271.3mm)	10.25in (260.4mm)
DL15112	12.68in (322.1mm)	12.25in (311.2mm)
DL15114	14.68in (372.9mm)	14.25in (362.0mm)
DL15116	16.68in (423.7mm)	16.25in (412.8mm)
DL15118	18.68in (474.5mm)	18.25in (463.6mm)
DL15120	20.68in (525.3mm)	20.25in (514.4mm)
2" INCREMENTS UP TO MAX OF 70"		

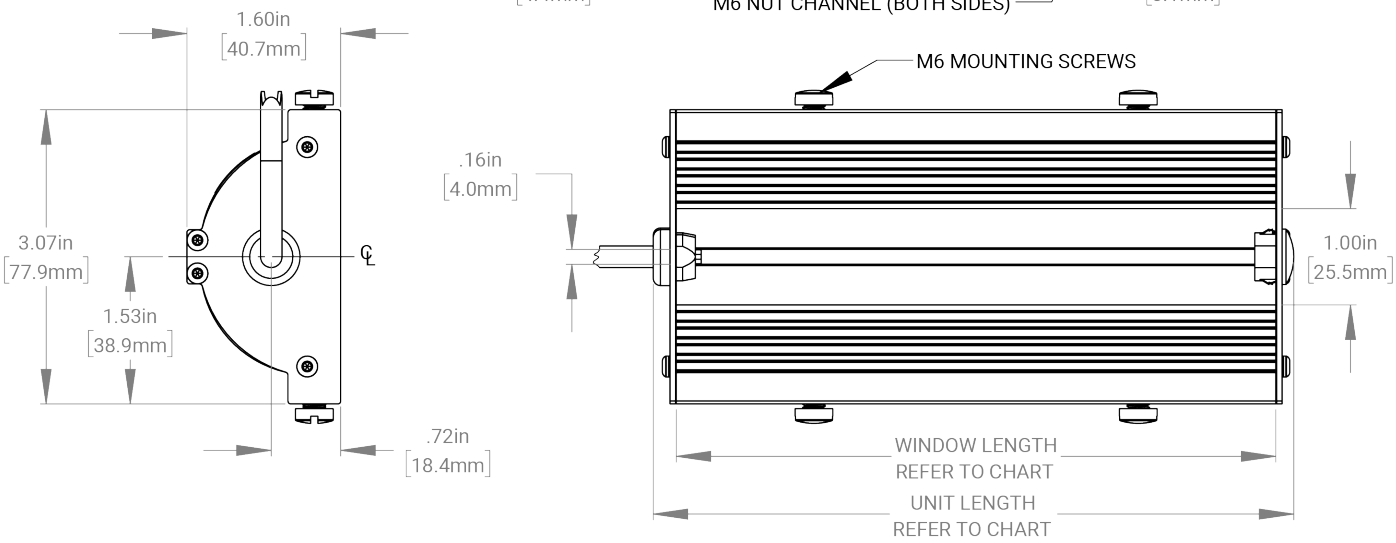

[DUAL CABLE]

DL151 LENGTH MATRIX	
PART #	LENGTH IN INCHES [mm]
DL15102	2.37 [60.2 mm]
DL15104	4.37 [111.0 mm]
DL15106	6.37 [161.8 mm]
DL15108	8.37 [212.6 mm]
DL15110	10.37 [263.4 mm]
DL15112	12.37 [314.2 mm]
2" INCREMENTS UP TO A MAX OF 70"	

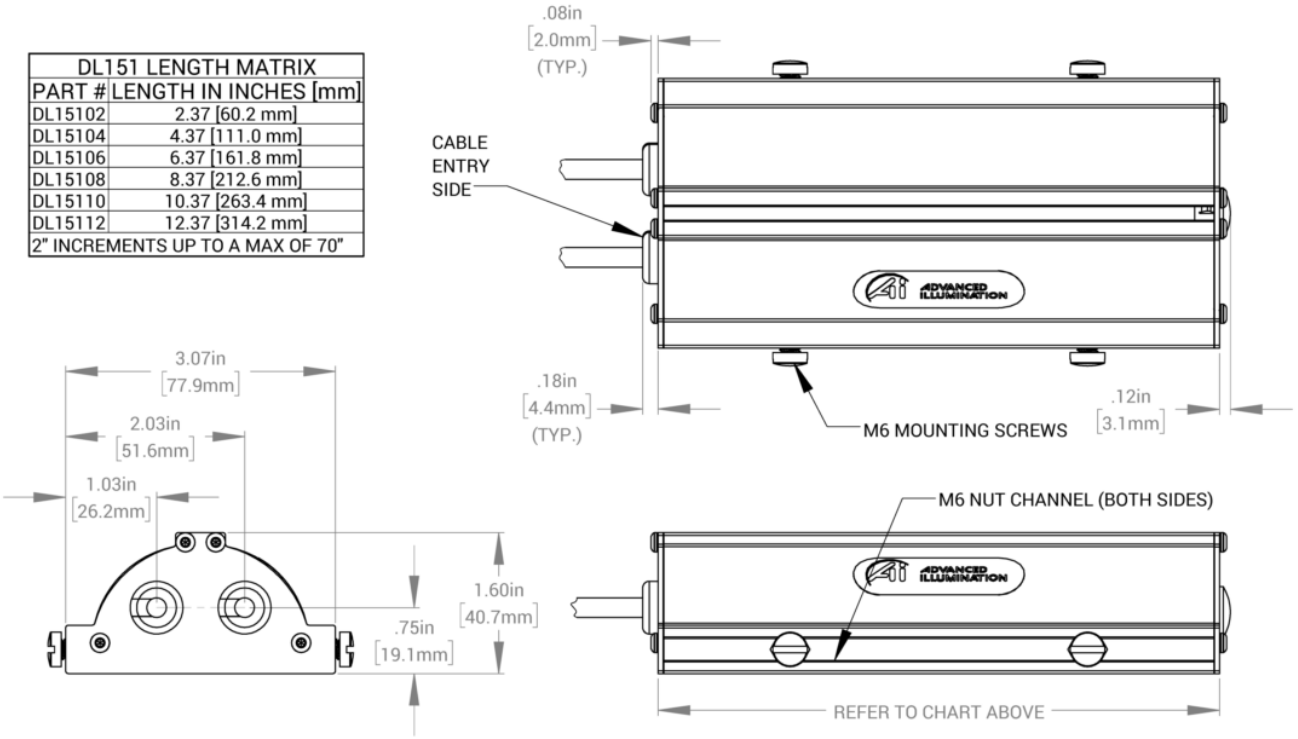

Warranty Information

Every Advanced illumination, Inc. (Ai) product is thoroughly inspected and tested before leaving the factory. Products are warranted to be free of defects in workmanship and materials for a period of FIVE YEARS from the original date of purchase. Should a defect develop during this period, customers may return the complete product, freight prepaid, to one of Ai's distributors or to the Ai factory. All product warranty returns require a Return Merchandise Authorization (RMA) number which is obtained from Customer Service. The RMA number must be clearly marked on the outside of the package. Ai will inspect the unit, and if a defect is found will, at our option, repair or replace the product without charge. Ai disclaims liability for any implied warranties, including implied warranties of "merchantability" and "fitness for a specific purpose." For products under warranty that have since been discontinued, Ai will make an effort to replace with equivalent parts; for circumstances that do not allow for equivalent replacement, Ai reserves the right to repair or replace these products with an updated version. Ai cannot be held responsible for the unauthorized or inappropriate use of its products. Any unauthorized repair or modifications will result in a voided warranty.
No Liability for Consequential Damages: In no event shall Ai be liable for any consequential, special, incidental, or indirect damages of any kind arising from the sale or use of the products.

Electromagnetic Compatibility

This product was tested and complies with the regulatory requirements and limits for electromagnetic compatibility (EMC) as stated in the product specifications. These requirements and limits are designed to provide reasonable protection against harmful interference only when the product is operated in its intended industrial electromagnetic environment. To minimize the potential for electromagnetic interference or unacceptable performance degradation, install and use this product in strict accordance with the instructions in the product documentation.

Customer Service

For information on existing orders, or to make an order adjustment, contact us Monday through Friday 8:00 am to 5:00 pm ET or send an email to orders@advancedillumination.com.

Company Information

Advanced Illumination
440 State Garage Road, Rochester, VT 05767
Phone: 802.767.3830
Fax: 802.767.2636
Email: info@advancedillumination.com
Web: advancedillumination.com
© 2021 Advanced illumination Inc. All rights reserved