LL174 Series

High Intensity Bar Lights

Product Highlights

- High intensity bar light with a large degree of available customization.



General Specifications

Electrical Specifications	Color	24V Current	All Other Controls
	365, 375, 385, 395, 405	0.35A per 6 inches	0.37A Max per 6 inches
	455, 470, 505, 530, WHI	0.37A per 6 inches	0.35A Max per 6 inches
	590, 625, 660, 730	0.38A per 6 inches	0.30A Max per 6 inches
	850, 940	0.38A per 6 inches	0.20A Max per 6 inches
Normal Operating Temperature	0 - 60°C		
Weight	Sealed Per 6" - 0.41 lbs Nonsealed Per 6" - 0.41 lbs		
Standard Cable Information	2 m long -0/+150 mm (80" -0/+6") - 105°C rated PVC jacket, foil shield with drain.		
Photobiological Risk Factor	Exempt Applicable Wavelengths: 850, 940 Group 1 (Low-Risk) Applicable Wavelengths: 455, 470, 505, 530, 590, 625, 666, 730, WHI Group 2 (Moderate-Risk) Applicable Wavelengths: 365, 375, 385, 395, 405		
Compliance	CE, RoHS, IEC 62471		

IP Rating	IP65 Sealed, IP50 Nonsealed
Lumen Maintenance	L70 = 50,000 Hours

Part Number Key

Model	Lens Type	Emitting Length (in)	-	Peak Wavelength	Connector/ Control	Heat Sink Option	Washdown Option	Light Conditioning Option	-	Alternative Connector
LL174	X	XX	-	XXX	XX	X	X	X	-	XXX
LL174	N (Narrow)	06" increments up to 84"		365 (UV)[3]	C1	H[2]	W[4]	D (Diffuser)		M8[1]
	M (Medium)			375 (UV)[3]	C5			P (Polarization)		M12[1]
	W (Wide)			385 (UV)[3]	IC					
				395 (UV)[3]	I3					
				405 (violet)[3]	I3S					
				455 (royal blue)[5]	I4					
				470 (blue)[5]	24					
				505 (cyan)						
				530 (green)						
				590 (amber)						
				625 (red orange)						
				660 (red)						
				730 (IR)						
				850 (IR)						
				940 (IR)						
				WHI (white)						

Example Part Numbers:
LL174N06-470C1HWD
LL174W24-625IC-M12

Beam Angle (FWHM):
Narrow = 8°
Medium = 21°
Wide = 29°

[1]Available with IC, I3, I3S, I4, and 24 V options only
[2]Not available over 72" lighted length
[3]Only available with medium lensing and not available with polarizer or diffuser option
[4]Not available over 48" lighted length
[5]455 nm & 470 nm will reduce the life of the polarizer

Change Notice

PCN No: 144

Date Issued: February 22, 2018

Notice Type: Product Change

Type: Washdown Lights

Change Notification Summary

Advanced illumination (Ai) is improving the way we manufacture washdown lights which will change their outward appearance. We will be replacing the black cordstock with clear flowable silicon. This change will provide a more durable finish and will effect the following lights: AL116, AL126, AL143, AL179, AL295, BL128, QM116, QM126, LL174 and SL147.

Please contact your Ai Sales Representative if you have any questions.

Washdown Lights Flowable Silicon

PCN No: 120

Date Issued: May 27, 2016

Notice Type: Product Revision Change/Discontinuation

Product Type: LL174, LL5806, LL6212 & LL6324

Change Notification Summary

In an effort to improve our products, Advanced illumination (Ai) will update the LEDs used in the LL174 design. This change will result in a brighter, more uniform light. Customers may still buy the current revision of the LL174 until December 2nd of 2016. After that time, orders for these products will be converted to their respective LL174 Revision A models.

In addition; the LL5806, LL6212 and LL6324 base PNs will changed to LL17406L, LL17412L and LL17424L respectively. Customers may still buy the current revision of the LL5806, LL6212 and LL6324 until June 30th of 2017. This LED change will result in additional wavelengths being available: 375nm, 385m, 405nm, 455nm, 505nm, 660nm, 730nm, and 940nm. Additionally the White LED color temperature will be changing from 6100K to 5500K.

Orders for dash numbered versions of LL174 will be honored until June 30th of 2017. Ai will be actively working with customers for those products to simplify the transition.

Please contact your Ai Sales Representative if you have any questions.

PCN 120

Mechanical Specs

[NONSEALED]

LL174 LENGTH MATRIX	
PART #	LENGTH IN INCHES (mm)
LL17406	6.84 (173.7 mm)
LL17412	12.84 (326.1 mm)
LL17418	18.84 (478.6 mm)
LL17424	24.84 (630.9 mm)
LL17430	30.84 (783.4 mm)
LL17436	36.84 (935.8 mm)
LL17442	42.84 (1088.2 mm)
LL17448	48.84 (1240.6 mm)
LL17454	54.84 (1392.9 mm)
LL17460	60.84 (1545.3 mm)
LL17466	66.84 (1697.7 mm)
LL17472	72.84 (1850.1 mm)
LL17478	78.84 (2002.5 mm)
LL17484	84.84 (2154.9 mm)

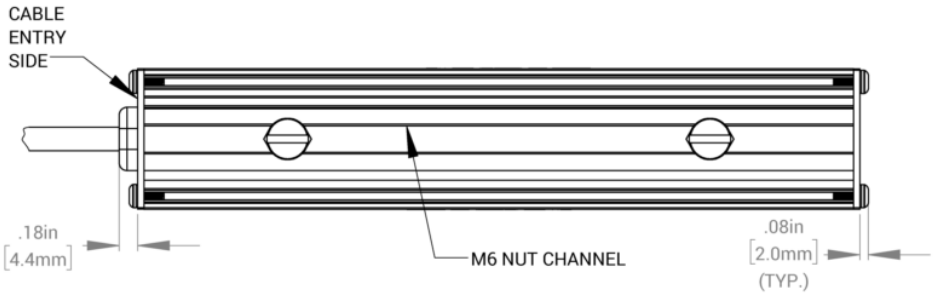

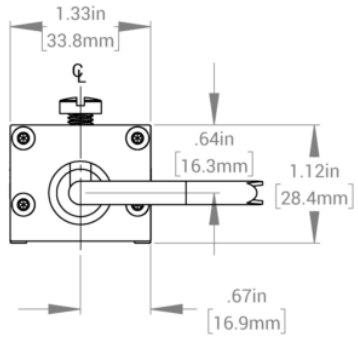

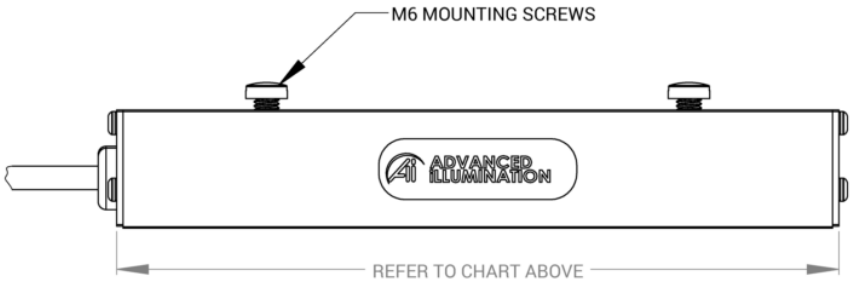

[HEATSINK]

LL174 LENGTH MATRIX	
PART #	LENGTH IN INCHES (mm)
LL17406	6.84 (173.7 mm)
LL17412	12.84 (326.1 mm)
LL17418	18.84 (478.6 mm)
LL17424	24.84 (630.9 mm)
LL17430	30.84 (783.4 mm)
LL17436	36.84 (935.8 mm)
LL17442	42.84 (1088.2 mm)
LL17448	48.84 (1240.6 mm)
LL17454	54.84 (1392.9 mm)
LL17460	60.84 (1545.3 mm)
LL17466	66.84 (1697.7 mm)
LL17472	72.84 (1850.1 mm)

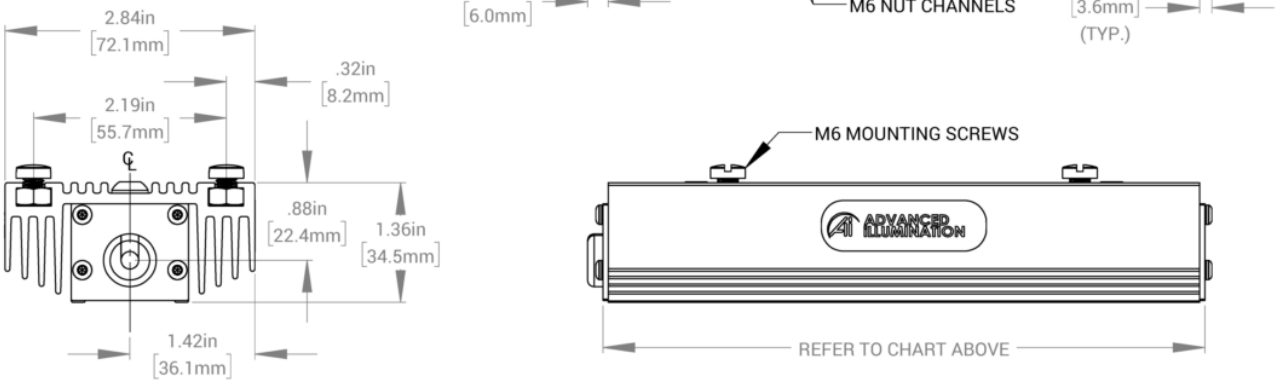

Optical Specs

Intensity Distribution

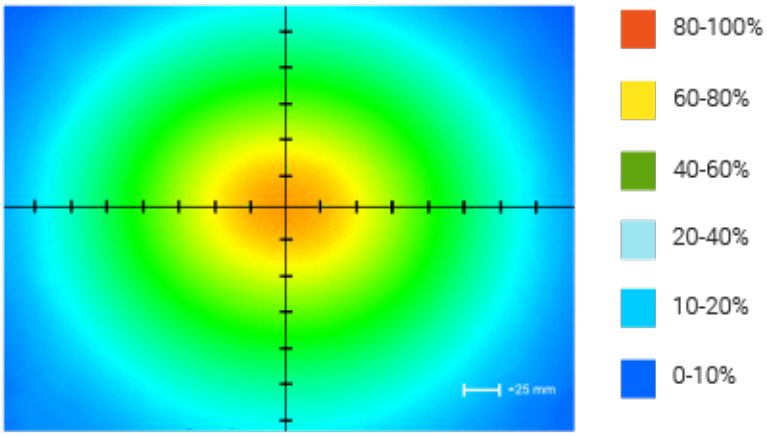

Optical measurement taken using LL17406-WHIIC Rev. A @ 300mm

Area of Illuminance & Intensity

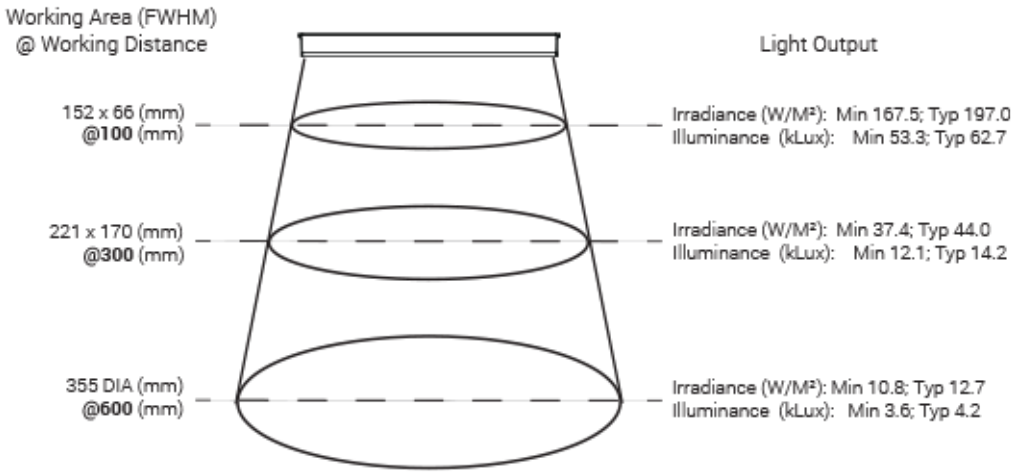

Electrical Specs

Standard Flying Lead Functions for 24V, IC, I3, I3S, and I4 Control Options

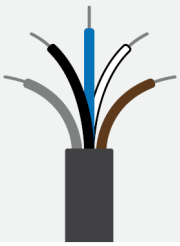

COLOR	24V FUNCTIONS	IC FUNCTIONS	I3/I3S FUNCTIONS	I4 FUNCTIONS
BROWN	24 V DC	24 V DC	24 V DC	24 V DC
WHITE	N/A	0-10 V ANALOG DIMMING	RESERVED	NPN/ACTIVE LOW TRIGGER
BLUE	DC GND	DC GND	DC GND	DC GND
BLACK	N/A	PNP/ACTIVE LOW GATE	PNP/ACTIVE HIGH TRIGGER	PNP/ACTIVE HIGH TRIGGER
GRAY	N/A	N/A	0-10 V ANALOG DIMMING	0-10 V ANALOG DIMMING

The functions listed above are applicable when this product is configured with built-in 24V, IC, I3, I3S, or I4 control, without the optional A-coded 5-position Male M12 or A-coded 4-position Male M8 connector.

M12 Connector Pinout Functions for 24V, IC, I3, I3S, and I4 Control Options

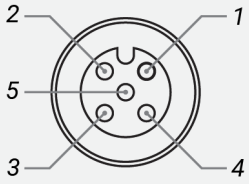

PIN	24V FUNCTIONS	IC FUNCTIONS	I3/I3S FUNCTIONS	I4 FUNCTIONS
1	24 V DC	24 V DC	24 V DC	24 V DC
2	N/A	0-10 V ANALOG DIMMING	RESERVED	NPN/ACTIVE LOW TRIGGER
3	DC GND	DC GND	DC GND	DC GND
4	N/A	PNP/ACTIVE LOW GATE	PNP/ACTIVE HIGH TRIGGER	PNP/ACTIVE HIGH TRIGGER
5	N/A	N/A	0-10 V ANALOG DIMMING	0-10 V ANALOG DIMMING

The functions listed above are only applicable when this product is configured with built-in 24V, IC, I3, I3S, or I4 control, with an A-coded 5-position Male M12 connector.

M8 Connector Pinout Functions for 24V, IC, I3, I3S, and I4 Control Options

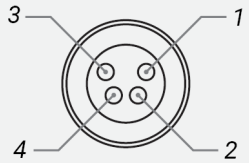

PIN	24V FUNCTIONS	IC FUNCTIONS	I3/I3S FUNCTIONS	I4 FUNCTIONS
1	24 V DC	24 V DC	24 V DC	24 V DC
2	N/A	0-10 V ANALOG DIMMING	0-10 V ANALOG DIMMING	0-10 V ANALOG DIMMING
3	DC GND	DC GND	DC GND	DC GND
4	N/A	PNP/ACTIVE LOW GATE	PNP/ACTIVE HIGH TRIGGER	PNP/ACTIVE HIGH TRIGGER

The functions listed above are only applicable when this product is configured with built-in 24V, IC, I3, I3S, or I4 control, with an A-coded 4-position Male M8 connector.

For details on operating configurations without built-in control (C1, C5, Q1, and Q4 control, when available), please refer to Advanced illumination's controller manuals.

Control Specs

C1 CONNECTOR	C5 CONNECTOR	ICS 2 (IC)	ICS 3
For use with: **DCS Series Controllers** Strobe/Continuous Controllers	For use with: **Pulsar 320** High Power Strobe only Controller	In-line Continuous Controller Powered with: **24V Power Supply**	In-line Strobe/ Continuous Controller Default On Powered with: **24V Power Supply**

ICS 3S (I3S)	I4	24 VOLT
In-line Strobe/ Continuous Controller Default Off Powered with: **24V Power Supply**	In-line Strobe/ Continuous Controller Powered with: **24V Power Supply**	Flying/Tinned Leads Powered with: **24V Power Supply**

Warranty Information

Every Advanced illumination, Inc. (Ai) product is thoroughly inspected and tested before leaving the factory. Products are warranted to be free of defects in workmanship and materials for a period of FIVE YEARS from the original date of purchase. Should a defect develop during this period, customers may return the complete product, freight prepaid, to one of Ai's distributors or to the Ai factory. All product warranty returns require a Return Merchandise Authorization (RMA) number which is obtained from Customer Service. The RMA number must be clearly marked on the outside of the package. Ai will inspect the unit, and if a defect is found will, at our option, repair or replace the product without charge. Ai disclaims liability for any implied warranties, including implied warranties of "merchantability" and "fitness for a specific purpose." For products under warranty that have since been discontinued, Ai will make an effort to replace with equivalent parts; for circumstances that do not allow for equivalent replacement, Ai reserves the right to repair or replace these products with an updated version. Ai cannot be held responsible for the unauthorized or inappropriate use of its products. Any unauthorized repair or modifications will result in a voided warranty.
No Liability for Consequential Damages: In no event shall Ai be liable for any consequential, special, incidental, or indirect damages of any kind arising from the sale or use of the products.

Electromagnetic Compatibility

This product was tested and complies with the regulatory requirements and limits for electromagnetic compatibility (EMC) as stated in the product specifications. These requirements and limits are designed to provide reasonable protection against harmful interference only when the product is operated in its intended industrial electromagnetic environment. To minimize the potential for electromagnetic interference or unacceptable performance degradation, install and use this product in strict accordance with the instructions in the product documentation.

Customer Service

For information on existing orders, or to make an order adjustment, contact us Monday through Friday 8:00 am to 5:00 pm ET or send an email to orders@advancedillumination.com.

Company Information

Advanced Illumination
440 State Garage Road, Rochester, VT 05767
Phone: 802.767.3830
Fax: 802.767.2636
Email: info@advancedillumination.com
Web: advancedillumination.com
© 2021 Advanced illumination Inc. All rights reserved