LL232 Series

MicroBrite™ Line Lights

Product Highlights

- Part of the MicroBrite™ family of high performance, compact machine vision lights.
- This line light series utilizes a fresnel lens for a compact form factor.
- Provides an intensity level of 189kLux (working distance of 75mm)

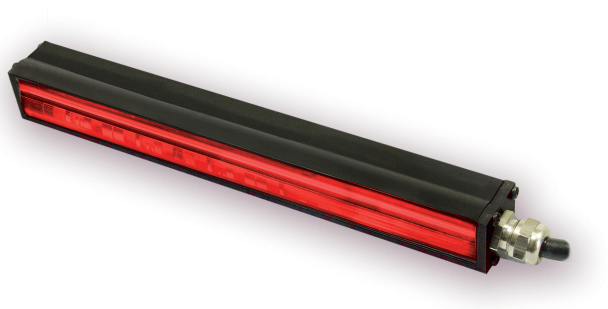

General Specifications

Electrical Specifications	Color	24V Current	All Other Controls
	455, WHI	0.10A Per 50mm	0.15A Max Per 50mm
	660, 730	0.06A Per 50mm	0.13A Max Per 50mm
	850, 940	0.10A Per 50mm	0.12A Max Per 50mm
Normal Operating Temperature	0 - 60°C		
Weight	Varies by Size; LL232-150 unit is 86.2g (3.04oz)		
Standard Cable Information	2 m long -0/+150 mm (80" -0/+6") - 105°C rated PVC jacket, foil shield with drain.		
Photobiological Risk Factor	Exempt Applicable Wavelengths: 850, 940 Group 1 (Low-Risk) Applicable Wavelengths: 455, 660, 730, WHI		
Compliance	IP Rating		
Lumen Maintenance	L70 = 50,000 Hours		

Part Number Key

Model	–	Emitting Length (mm)	Peak Wavelength	Connector/ Control	–	Alternative Connector
LL232	–	XXX	XXX	X	–	XXX
LL232		050 mm increments from 050 mm to 750 mm	455 (royal blue) 660 (red) 730 (IR) 850 (IR) 940 (IR) WHI (white)	C1 C5 Q4 IC I3 I3S 24		M8[1] M12[1]

EX:
LL232-050WHIC1
LL232-200660IC-M12

[1] Available with IC, I3, I3S, and 24 V options only

See website product page for in-stock product numbers.

Shipping:
Stock Products: within three days
Build-to-Order Products: within one to three weeks

Mechanical Specs

LL232 LENGTH MATRIX	
PART #	LENGTH IN INCHES (mm)
LL232-050	2.25 (57.2 mm)
LL232-100	4.25 (108.0 mm)
LL232-150	6.25 (158.8 mm)
LL232-200	8.25 (209.6 mm)
LL232-250	10.25 (260.4 mm)
LL232-300	12.25 (311.2 mm)
LL232-350	14.25 (362.0 mm)
LL232-400	16.25 (412.8 mm)
LL232-450	18.25 (463.6 mm)
LL232-500	20.25 (514.4 mm)
LL232-550	22.25 (565.2 mm)
LL232-600	24.25 (616.0 mm)
LL232-650	26.25 (666.8 mm)
LL232-700	28.25 (717.6 mm)
LL232-750	30.25 (768.4 mm)

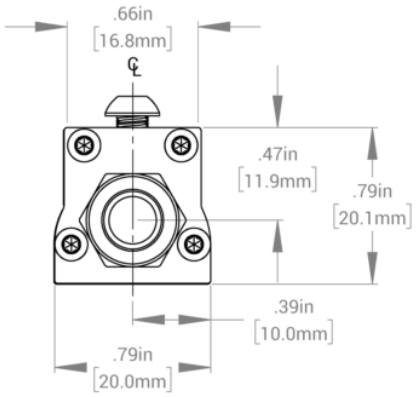

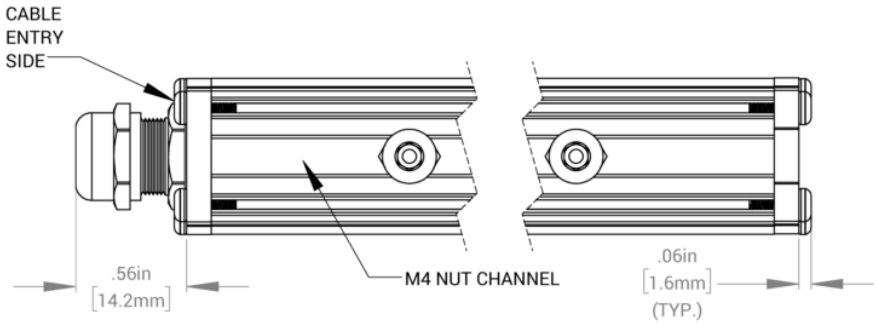

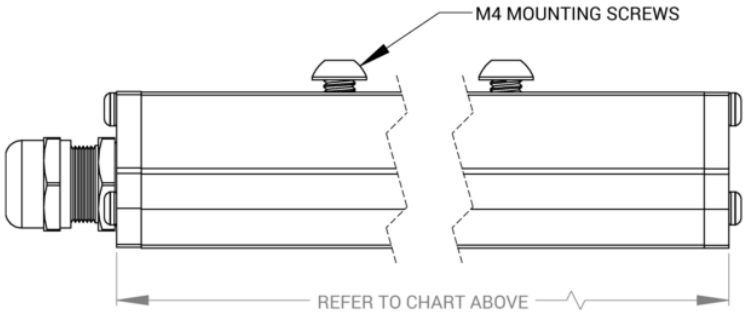

Optical Specs

Intensity Distribution

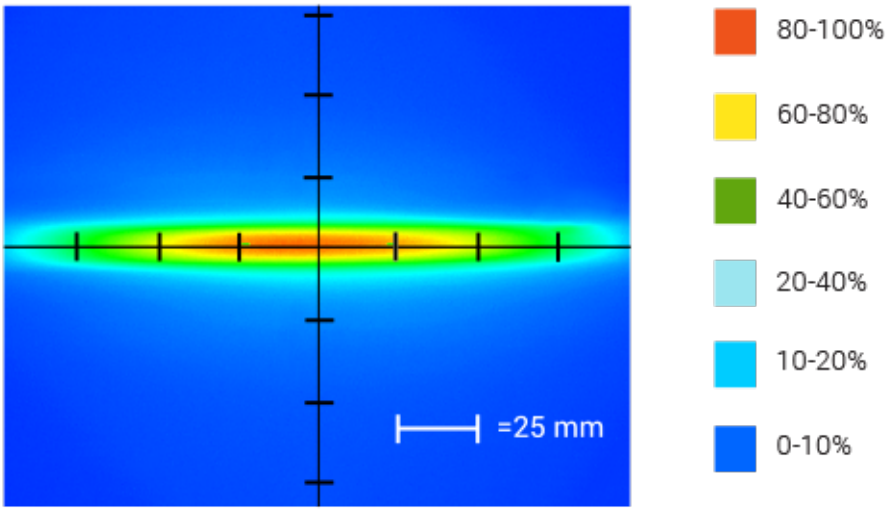

Optical measurement taken using LL232-150WHIIC @ 75mm

Area of Illuminance & Intensity

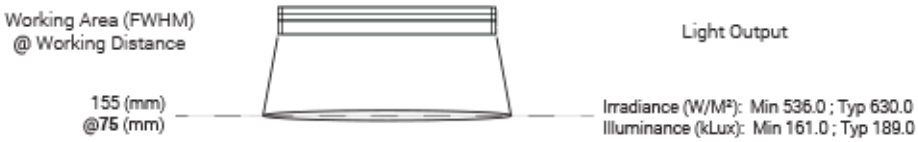

Electrical Specs

Standard Flying Lead Functions for 24V, IC, I3 and I3S Control Options

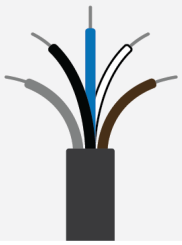

COLOR	24V FUNCTIONS	IC FUNCTIONS	I3/I3S FUNCTIONS
BROWN	24 V DC	24 V DC	24 V DC
WHITE	N/A	0-10 V ANALOG DIMMING	RESERVED
BLUE	DC GND	DC GND	DC GND
BLACK	N/A	PNP/ACTIVE LOW GATE	PNP/ACTIVE HIGH TRIGGER
GRAY	N/A	N/A	0-10 V ANALOG DIMMING

*The functions listed above are applicable when this product is configured with built-in 24V, IC, I3, or I3S control, **without** the optional A-coded 5-position Male M12 or A-coded 4-position Male M8 connector.*

M12 Connector Pinout Functions for 24V, IC, I3 and I3S Control Options

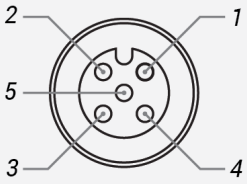

PIN	24V FUNCTIONS	IC FUNCTIONS	I3/I3S FUNCTIONS
1	24 V DC	24 V DC	24 V DC
2	N/A	0-10 V ANALOG DIMMING	RESERVED
3	DC GND	DC GND	DC GND
4	N/A	PNP/ACTIVE LOW GATE	PNP/ACTIVE HIGH TRIGGER
5	N/A	N/A	0-10 V ANALOG DIMMING

*The functions listed above are only applicable when this product is configured with built-in 24V, IC, I3, or I3S control, **with** an A-coded 5-position Male M12 connector.*

M8 Connector Pinout Functions for 24V, IC, I3 and I3S Control Options

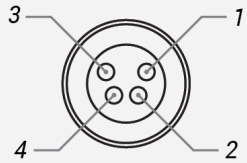

PIN	24V FUNCTIONS	IC FUNCTIONS	I3/I3S FUNCTIONS
1	24 V DC	24 V DC	24 V DC
2	N/A	0-10 V ANALOG DIMMING	0-10 V ANALOG DIMMING
3	DC GND	DC GND	DC GND
4	N/A	PNP/ACTIVE LOW GATE	PNP/ACTIVE HIGH TRIGGER

*The functions listed above are only applicable when this product is configured with built-in 24V, IC, I3, or I3S control, **with** an A-coded 4-position Male M8 connector.*

For details on operating configurations without built-in control (C1, C5, Q1, and Q4 control, when available), please refer to Advanced illumination's controller manuals.

Control Specs

C1 Connector	C5 Connector	IC	I3	I3S	24
For use with: **DCS Series Controllers**	*For use with:* **Pulsar 320 Strobe Controller.**	Continous in-line controller *Powered with:* **24V power supply**	Combination strobe/continous in-line controller *Powered with:* **24V power supply**	Default-OFF strobe/continous in-line controller *Powered with:* **24V power supply**	Flying/tinned leads *Powered with:* **24V power supply**

Warranty Information

Every Advanced illumination, Inc. (Ai) product is thoroughly inspected and tested before leaving the factory. Products are warranted to be free of defects in workmanship and materials for a period of FIVE YEARS from the original date of purchase. Should a defect develop during this period, customers may return the complete product, freight prepaid, to one of Ai's distributors or to the Ai factory. All product warranty returns require a Return Merchandise Authorization (RMA) number which is obtained from Customer Service. The RMA number must be clearly marked on the outside of the package. Ai will inspect the unit, and if a defect is found will, at our option, repair or replace the product without charge. Ai disclaims liability for any implied warranties, including implied warranties of "merchantability" and "fitness for a specific purpose." For products under warranty that have since been discontinued, Ai will make an effort to replace with equivalent parts; for circumstances that do not allow for equivalent replacement, Ai reserves the right to repair or replace these products with an updated version. Ai cannot be held responsible for the unauthorized or inappropriate use of its products. Any unauthorized repair or modifications will result in a voided warranty.
No Liability for Consequential Damages: In no event shall Ai be liable for any consequential, special, incidental, or indirect damages of any kind arising from the sale or use of the products.

Electromagnetic Compatibility

This product was tested and complies with the regulatory requirements and limits for electromagnetic compatibility (EMC) as stated in the product specifications. These requirements and limits are designed to provide reasonable protection against harmful interference only when the product is operated in its intended industrial electromagnetic environment. To minimize the potential for electromagnetic interference or unacceptable performance degradation, install and use this product in strict accordance with the instructions in the product documentation.

Customer Service

For information on existing orders, or to make an order adjustment, contact us Monday through Friday 8:00 am to 5:00 pm ET or send an email to orders@advancedillumination.com.

Company Information

Advanced Illumination
440 State Garage Road, Rochester, VT 05767
Phone: 802.767.3830
Fax: 802.767.2636
Email: info@advancedillumination.com
Web: advancedillumination.com
© 2021 Advanced illumination Inc. All rights reserved