RL208 Series

MicroBrite™ Bright Field Series

Product Highlights

- Part of the MicroBrite™ family of high performance, compact machine vision lights.
- Produces an intensity level of 41kLux (working distance of 180mm).
- Available in several sizes including 50mm, 100mm, 160mm and 200mm.

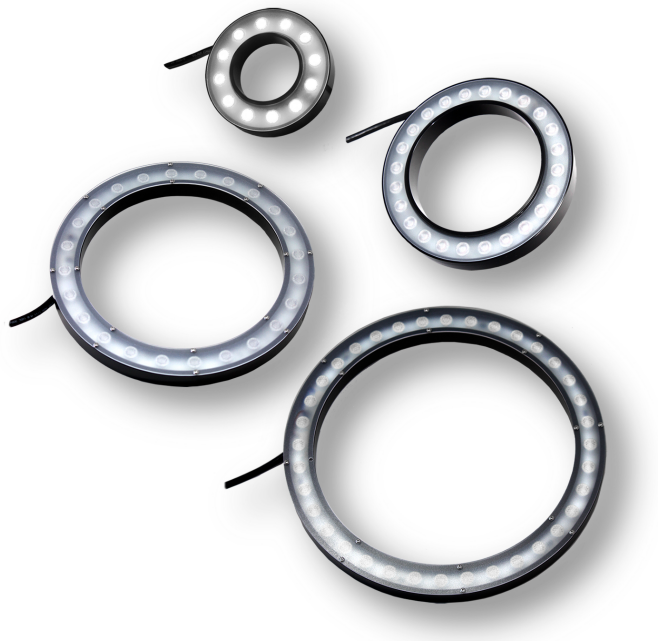

General Specifications

	Part Number	Color	24V Current	All Other Controls
Electrical Specifications	RL208X-050	365, 375, 385, 395, 405	0.12 A	0.32 A Max
	RL208X-050	625, 660	0.12 A	0.28 A Max
	RL208X-050	455, 470, 505, 530, 590, WHI	0.14 A	0.47 A Max
	RL208X-050	730, 850, 940	0.12 A	0.22 A Max
	RL208X-100	365, 375, 385, 395, 405	0.24 A	0.58 A Max
	RL208X-100	625, 660	0.23 A	0.57 A Max
	RL208X-100	455, 470, 505, 530, 590, WHI	0.27 A	0.79 A Max
	RL208X-100	730, 850, 940	0.24 A	0.43 A Max
	RL208X-160	365, 375, 385, 395, 405	0.24 A	0.62 A Max
	RL208X-160	625, 660	0.23 A	0.66 A Max
	RL208X-160	455, 470, 505, 530, 590, WHI	0.27 A	0.98 A Max
	RL208X-160	730, 850, 940	0.24 A	0.54 A Max
	RL208X-200	365, 375, 385, 395, 405	0.36 A	0.87 A Max
	RL208X-200	625, 660	0.36 A	0.66 A Max
	RL208X-200	455, 470, 505, 530, 590, WHI	0.40 A	0.98 A Max
	RL208X-200	730, 850, 940	0.36 A	0.54 A Max
Normal Operating Temperature	0 - 60°C			
Weight	Varies by size			
Standard Cable Information	2 m long -0/+150 mm (80" -0/+6") - 105°C rated PVC jacket, foil shield with drain.			
Photobiological Risk Factor	Exempt Applicable Wavelengths; 850, 940 Group 1 (Low Risk) Applicable Wavelengths: 455, 470, 505, 530, 590, 625, 660, 730, WHI Group 2 (Moderate Risk) Applicable Wavelengths: 365, 375, 385, 395, 405			
Compliance	CE, RoHS, IEC 62471			

IP Rating	IP50
Lumen Maintenance	L70 = 50,000 Hours

"X" in part number refers to lens option. See part number key for more information.

Part Number Key

Model	Lens Type	–	Inner Diameter (mm)	Peak Wavelength	Connector/ Control	–	Alternative Connector
RL208	X	–	XXX	XXX	XX	–	XXX
RL208	M (Medium) W[3] (Wide)		050 100 160 200	365 (UV) 375 (UV) 385 (UV) 395 (UV) 405 (violet) 455 (royal blue) 470 (blue) 505 (cyan) 530 (green) 590 (amber) 625 (red orange) 660 (red) 730 (IR) 850 (IR) 940 (IR) WHI (white)	C1 C5 IC I3 I3S 24[2]	M8[1] M12[1]

EX:
RL208M-050WHIC1
RL208W-200625IC-M12

[1] Available with IC, I3, and I3S options only
[2] The 24 V version will have a lower output intensity by ~10-15% and operate at a temperature ~10-15% higher than other options.
[3] Not available with UV options

Beam Angle (FWHM):
Medium = 21°
Wide = 32°

See website product page for in-stock product numbers.

Shipping:
Stock Products: within three days
Build-to-Order Products: within one to three weeks

Control Specs

C1 Connector	C5 Connector	ICS 2 (IC)	ICS 3 (I3)	ICS 3S (I3S)	24
For use with: DCS Series Controllers	*For use with:* Pulsar 320 Strobe Controller.	Continous in-line controller *Powered with:* 24V power supply	Combination strobe/continous in-line controller *Powered with:* 24V power supply	Default-OFF strobe/continous in-line controller *Powered with:* 24V power supply	Flying/tinned leads *Powered with:* 24V power supply

Change Notice

PCN No: 132

Date Issued: June 24, 2016

Notice Type: Product Revision Change

Product Type: RL208

Change Notification Summary

In an effort to improve our products, Advanced illumination (Ai) will update the LEDs used in the RL208 design. This change will result in a brighter, more uniform light at the same price*. Customers may still buy the current revision of this model until July 22th of 2016. After that time, orders for these products will be converted to their respective RL208 Revison A models.

This LED change will result in additional wavelengths being available: 365nm, 375nm, 385nm, 395nm, 405nm, 470nm, 505nm, 590nm, 660nm, 730nm, 850nm and 940nm. Additionally the white LED color temperture will be changing from 6100K to 5500K.

*UV wavelengths (365nm, 375nm, 385nm, 395nm & 405nm) will be sold a higher list price, which will be released at the time of product introduction.

Please contact your Ai Sales Representative if you have any questions.

PCN 132 RL208

Mechanical Specs

[RL208-050]

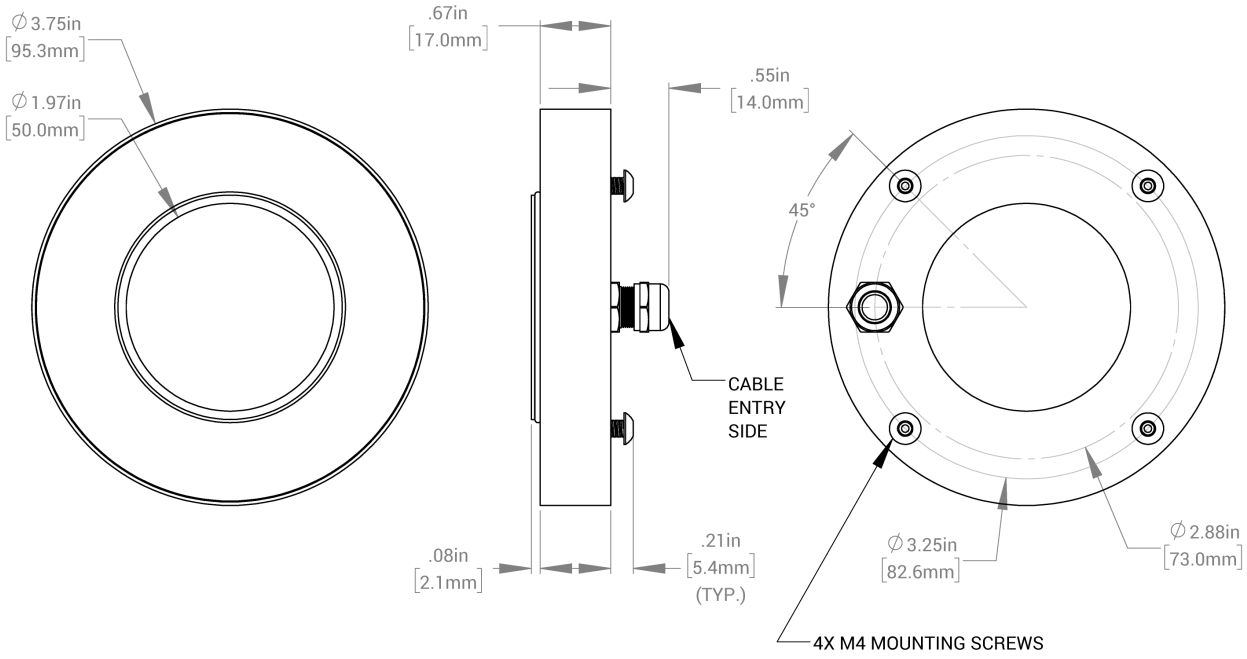

[RL208-100]

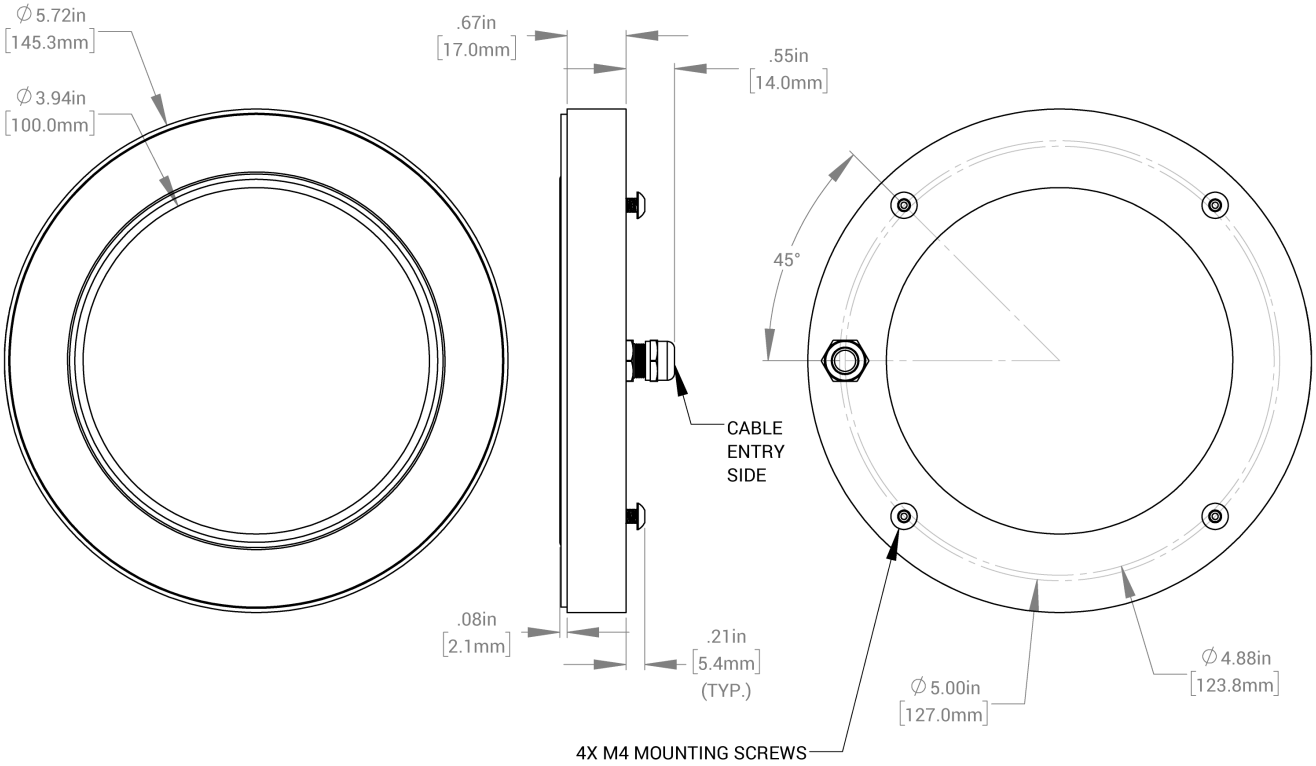
∅5.72in
[145.3mm]
∅3.94in
[100.0mm]
.67in
[17.0mm]
.55in
[14.0mm]
45°
CABLE
ENTRY
SIDE
.08in
[2.1mm]
.21in
[5.4mm]
(TYP.)
∅5.00in
[127.0mm]
∅4.88in
[123.8mm]
4X M4 MOUNTING SCREWS

[RL208-160]

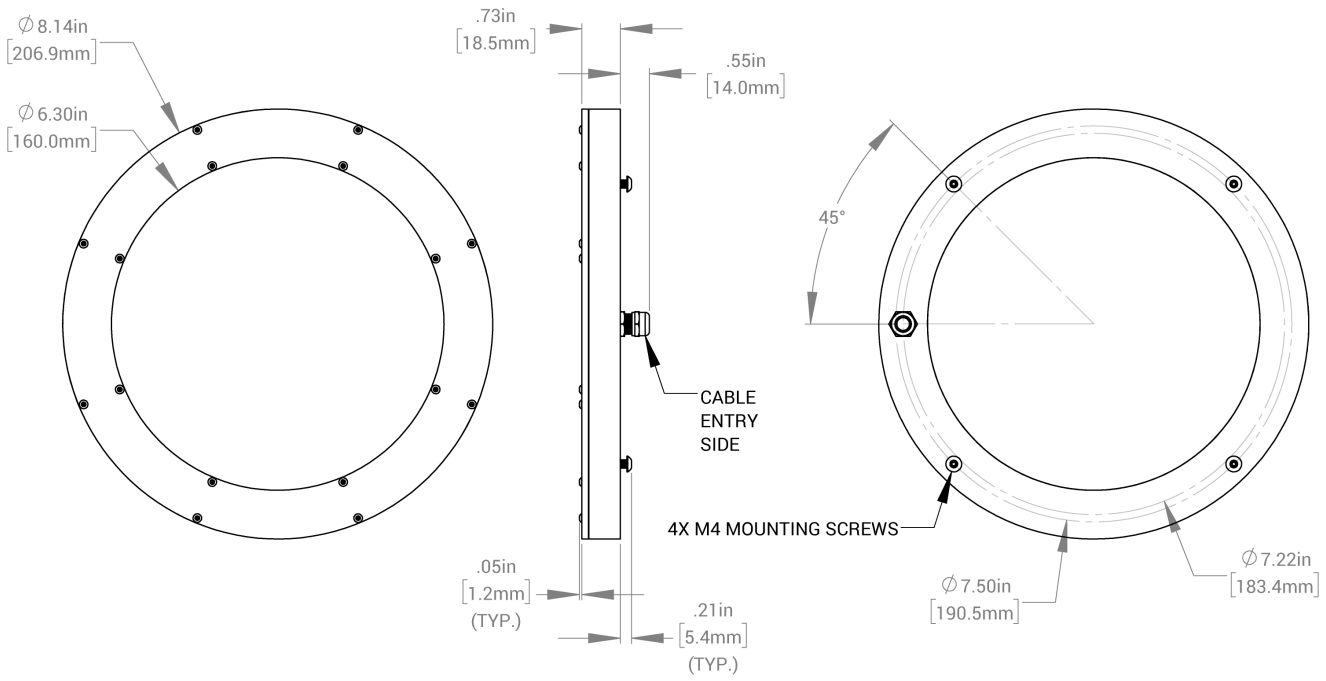
∅8.14in
[206.9mm]
∅6.30in
[160.0mm]
.73in
[18.5mm]
.55in
[14.0mm]
CABLE
ENTRY
SIDE
.05in
[1.2mm]
(TYP.)
.21in
[5.4mm]
(TYP.)
45°
4X M4 MOUNTING SCREWS
∅7.50in
[190.5mm]
∅7.22in
[183.4mm]

[RL208-200]

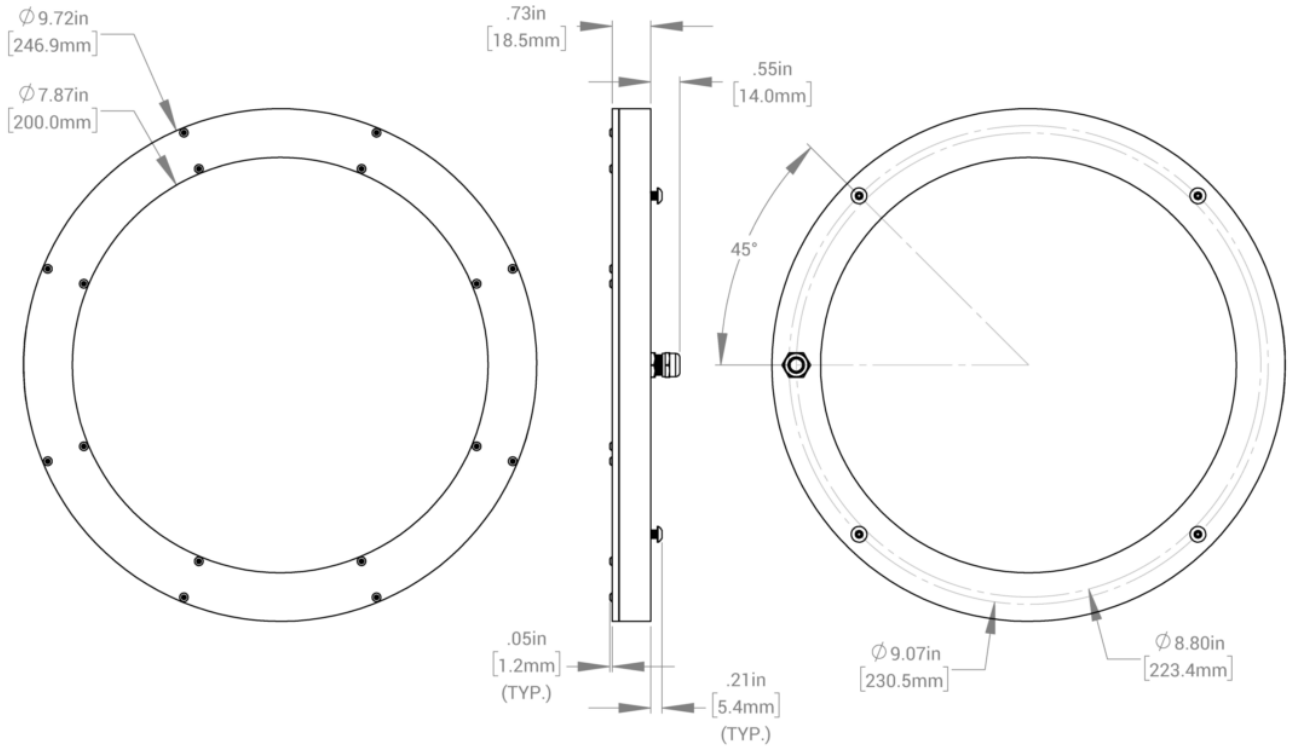
∅9.72in
[246.9mm]
∅7.87in
[200.0mm]
.73in
[18.5mm]
.55in
[14.0mm]
45°
.05in
[1.2mm]
(TYP.)
.21in
[5.4mm]
(TYP.)
∅9.07in
[230.5mm]
∅8.80in
[223.4mm]

Electrical Specs

Standard Flying Lead Functions for 24V, IC, I3 and I3S Control Options

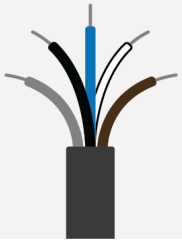

COLOR	24V FUNCTIONS	IC FUNCTIONS	I3/I3S FUNCTIONS
BROWN	24 V DC	24 V DC	24 V DC
WHITE	N/A	0-10 V ANALOG DIMMING	RESERVED
BLUE	DC GND	DC GND	DC GND
BLACK	N/A	PNP/ACTIVE LOW GATE	PNP/ACTIVE HIGH TRIGGER
GRAY	N/A	N/A	0-10 V ANALOG DIMMING

*The functions listed above are applicable when this product is configured with built-in 24V, IC, I3, or I3S control, **without** the optional A-coded 5-position Male M12 or A-coded 4-position Male M8 connector.*

M12 Connector Pinout Functions for 24V, IC, I3 and I3S Control Options

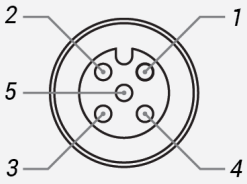

PIN	24V FUNCTIONS	IC FUNCTIONS	I3/I3S FUNCTIONS
1	24 V DC	24 V DC	24 V DC
2	N/A	0-10 V ANALOG DIMMING	RESERVED
3	DC GND	DC GND	DC GND
4	N/A	PNP/ACTIVE LOW GATE	PNP/ACTIVE HIGH TRIGGER
5	N/A	N/A	0-10 V ANALOG DIMMING

*The functions listed above are only applicable when this product is configured with built-in 24V, IC, I3, or I3S control, **with** an A-coded 5-position Male M12 connector.*

M8 Connector Pinout Functions for 24V, IC, I3 and I3S Control Options

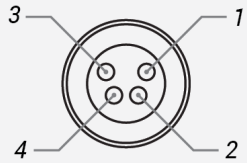

PIN	24V FUNCTIONS	IC FUNCTIONS	I3/I3S FUNCTIONS
1	24 V DC	24 V DC	24 V DC
2	N/A	0-10 V ANALOG DIMMING	0-10 V ANALOG DIMMING
3	DC GND	DC GND	DC GND
4	N/A	PNP/ACTIVE LOW GATE	PNP/ACTIVE HIGH TRIGGER

*The functions listed above are only applicable when this product is configured with built-in 24V, IC, I3, or I3S control, **with** an A-coded 4-position Male M8 connector.*

For details on operating configurations without built-in control (C1, C5, Q1, and Q4 control, when available), please refer to Advanced illumination's controller manuals.

Optical Specs

Intensity Distribution

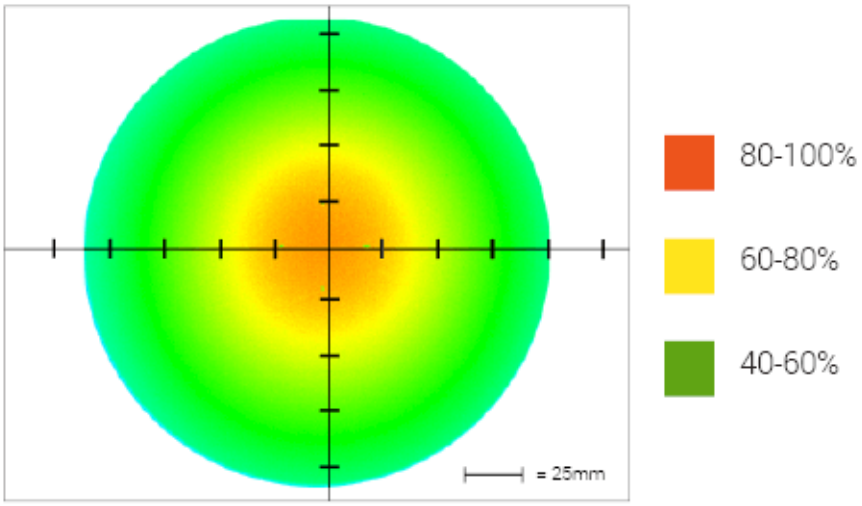

Optical measurement taken using RL208M-100WHIIC @ 300mm

Area of Illuminance & Intensity

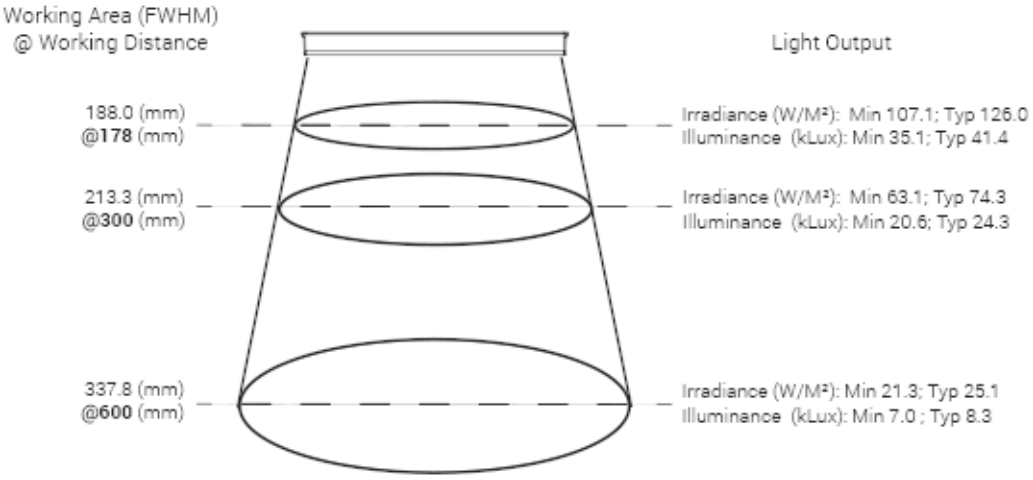

Area of Illuminance & Intensity for RL208M-WHI

Medium Lens

Part Number	Working Distance (mm)	Illuminance (klux)	Irradiance (W/m²)	FWHM Diameter (mm)
RL208M-050	100	57.7	177.0	101.6
	300	15.7	47.7	177.8
	600	4.50	13.4	330.2
RL208M-100	**178**	**41.4**	**126.0**	**188.0**
	300	**24.3**	**74.3**	**213.3**
	600	**8.30**	**25.1**	**337.8**
RL208M-160	230	22.0	70.0	279.4
	300	20.0	62.0	292.1
	600	9.0	27.0	386.0
RL208M-200[1]	**300**	**15.0**	**46.0**	**342.9**
	450	**11.3**	**33.2**	**386.0**
	600	**8.0**	**23.0**	**431.8**

[1] Values shown represent an estimated 30% increase to prior version.

Warranty Information

Every Advanced illumination, Inc. (Ai) product is thoroughly inspected and tested before leaving the factory. Products are warranted to be free of defects in workmanship and materials for a period of FIVE YEARS from the original date of purchase. Should a defect develop during this period, customers may return the complete product, freight prepaid, to one of Ai's distributors or to the Ai factory. All product warranty returns require a Return Merchandise Authorization (RMA) number which is obtained from Customer Service. The RMA number must be clearly marked on the outside of the package. Ai will inspect the unit, and if a defect is found will, at our option, repair or replace the product without charge. Ai disclaims liability for any implied warranties, including implied warranties of "merchantability" and "fitness for a specific purpose." For products under warranty that have since been discontinued, Ai will make an effort to replace with equivalent parts; for circumstances that do not allow for equivalent replacement, Ai reserves the right to repair or replace these products with an updated version. Ai cannot be held responsible for the unauthorized or inappropriate use of its products. Any unauthorized repair or modifications will result in a voided warranty.
No Liability for Consequential Damages: In no event shall Ai be liable for any consequential, special, incidental, or indirect damages of any kind arising from the sale or use of the products.

Electromagnetic Compatibility

This product was tested and complies with the regulatory requirements and limits for electromagnetic compatibility (EMC) as stated in the product specifications. These requirements and limits are designed to provide reasonable protection against harmful interference only when the product is operated in its intended industrial electromagnetic environment. To minimize the potential for electromagnetic interference or unacceptable performance degradation, install and use this product in strict accordance with the instructions in the product documentation.

Customer Service

For information on existing orders, or to make an order adjustment, contact us Monday through Friday 8:00 am to 5:00 pm ET or send an email to orders@advancedillumination.com.

Company Information

Advanced Illumination
440 State Garage Road, Rochester, VT 05767
Phone: 802.767.3830
Fax: 802.767.2636
Email: info@advancedillumination.com
Web: advancedillumination.com
© 2021 Advanced illumination Inc. All rights reserved