RL5064

Dual Function Ring Light

Product Highlights

- Characterized as a Dual Function Ring Light, the RL5064 is capable of both bright and dark field illumination with independent control (depending on control option).
- A wide variety of wavelengths may be specified from UV to IR.
- The large inner diameter of the ring light can accommodate lenses up to 55mm in diameter.
- The light can also be ordered with an optional 3 point mounting barrel.



General Specifications

Electrical Specifications	Color	24V Current Bright Field	24V Current Dark Field	All Other Controls Bright Field	All Other Controls Dark Field
	625, 660, 880	0.12 A	0.24 A	0.04 A	0.12 A
	WHI	0.08 A	0.16 A	0.027 A	0.08 A
	470	0.08 A	0.17 A	0.027 A	0.09 A
	520	0.08 A	0.18 A	0.027 A	0.10 A
	395	0.08 A	0.19 A	0.027 A	0.11 A
Normal Operating Temperature	0 - 60°C				
Weight	273.1g (9.6 oz) for standard mounting option				
Standard Cable Information	2 m long -0/+150 mm (80" -0/+6") - 105°C rated PVC jacket, foil shield with drain.				
Photobiological Risk Factor	Exempt Applicable Wavelengths: 880 Group 1 (Low-Risk) Applicable Wavelengths: 470, 520, 625, 660, WHI Group 2 (Moderate-Risk) Applicable Wavelengths: 395				
Compliance	CE, RoHS				
IP Rating	Not Rated				

Lumen Maintenance	L70 = 50,000 hours

Part Number Key

Model	Mounting Options	–	Peak Wavelength	Connector/ Control	–	Alternative Connector
RL5064	X	–	XXX	XX	–	XXX
RL5064	S (Standard) B (Barrel)		395 (UV) 470 (blue) 520 (green) 625 (red orange) 660 (red) 880 (IR) WHI (white)	C1 C5 IC I3 I3S 24		M8[1] M12[1]

EX:
RL5064B-395C1
RL5064-625I3-M12

[1] Available with IC, I3, I3S, and 24 V options only
[2] Not available in IC or 24 V option

See website product page for in-stock product numbers.

Shipping:
Stock Products: within three days
Build-to-Order Products: within one to three weeks

Change Notice

PCN No: 166

Date Issued: May 5, 2023
Notice Type: Product Change
Product Type: 660nm Wavelength on traditional 5mm Lights Discontinuation

Change Notification Summary

Advanced illumination (Ai) will be ending the manufacture of the 660nm color option on our classic aimed lights due to the LEDs being discontinued from the manufacturer. We expect to have six months of inventory to fulfill orders, after that we suggest purchasing the same light but with the 625nm wavelength.

Please contact your Ai Sales Representative if you have any questions.

PCN 166

Electrical Specs

Standard Flying Lead Functions for 24V, IC, I3 and I3S Control Options

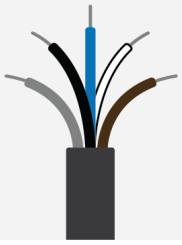

COLOR	24V FUNCTIONS	IC FUNCTIONS	I3/I3S FUNCTIONS
BROWN	24 V DC	24 V DC	24 V DC
WHITE	N/A	0-10 V ANALOG DIMMING	RESERVED
BLUE	DC GND	DC GND	DC GND
BLACK	N/A	PNP/ACTIVE LOW GATE	PNP/ACTIVE HIGH TRIGGER
GRAY	N/A	N/A	0-10 V ANALOG DIMMING

*The functions listed above are applicable when this product is configured with built-in 24V, IC, I3, or I3S control, **without** the optional A-coded 5-position Male M12 or A-coded 4-position Male M8 connector.*

M12 Connector Pinout Functions for 24V, IC, I3 and I3S Control Options

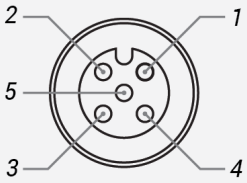

PIN	24V FUNCTIONS	IC FUNCTIONS	I3/I3S FUNCTIONS
1	24 V DC	24 V DC	24 V DC
2	N/A	0-10 V ANALOG DIMMING	RESERVED
3	DC GND	DC GND	DC GND
4	N/A	PNP/ACTIVE LOW GATE	PNP/ACTIVE HIGH TRIGGER
5	N/A	N/A	0-10 V ANALOG DIMMING

*The functions listed above are only applicable when this product is configured with built-in 24V, IC, I3, or I3S control, **with** an A-coded 5-position Male M12 connector.*

M8 Connector Pinout Functions for 24V, IC, I3 and I3S Control Options

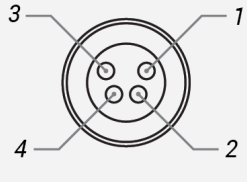

PIN	24V FUNCTIONS	IC FUNCTIONS	I3/I3S FUNCTIONS
1	24 V DC	24 V DC	24 V DC
2	N/A	0-10 V ANALOG DIMMING	0-10 V ANALOG DIMMING
3	DC GND	DC GND	DC GND
4	N/A	PNP/ACTIVE LOW GATE	PNP/ACTIVE HIGH TRIGGER

*The functions listed above are only applicable when this product is configured with built-in 24V, IC, I3, or I3S control, **with** an A-coded 4-position Male M8 connector.*

For details on operating configurations without built-in control (C1, C5, Q1, and Q4 control, when available), please refer to Advanced illumination's controller manuals.

Control Specs

C1 Connector	C5 Connector	ICS 2 (IC)	ICS 3 (I3)	ICS 3S (I3S)	24
For use with: **DCS Series Controllers**	*For use with:* **Pulsar 320 Strobe Controller.**	Continous in-line controller *Powered with:* **24V power supply**	Combination strobe/continous in-line controller *Powered with:* **24V power supply**	Default-OFF strobe/continous in-line controller *Powered with:* **24V power supply**	Flying/tinned leads *Powered with:* **24V power supply**

Optical Specs

Dark Field Intensity Distribution

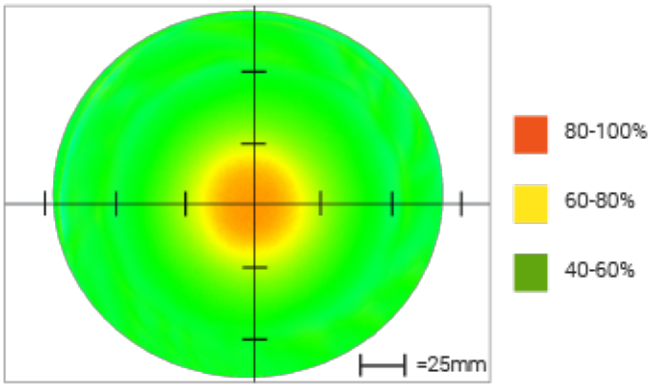

Optical measurement taken using
RL5064-625I3 @ 15 mm Dark Field

Bright Field Intensity Distribution

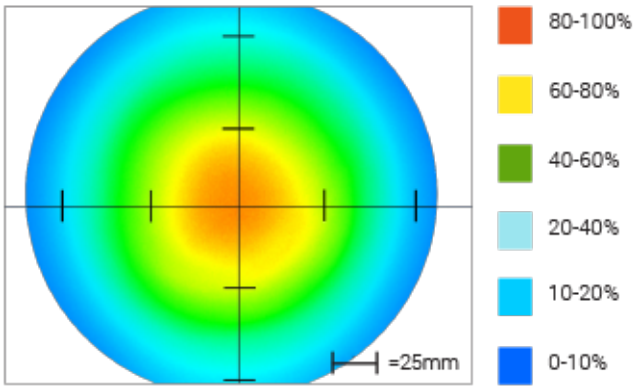

Optical measurement taken using
RL5064-625I3 @ 15 mm Bright Field

Dark Field Area of Illuminance & Intensity

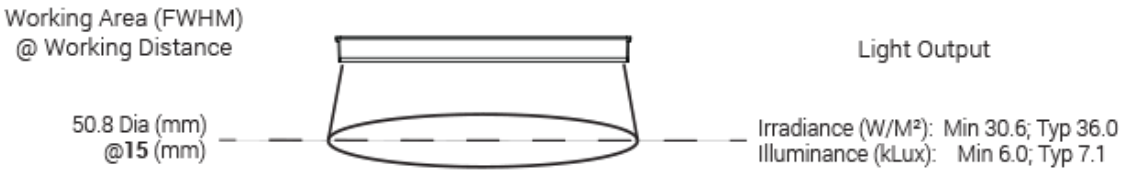

Bright Field Area of Illuminance & Intensity

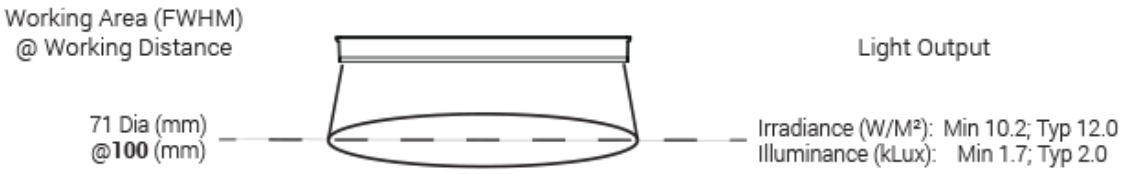

Mechanical Specs

[RL5064 - STANDARD MOUNTING OPTION]

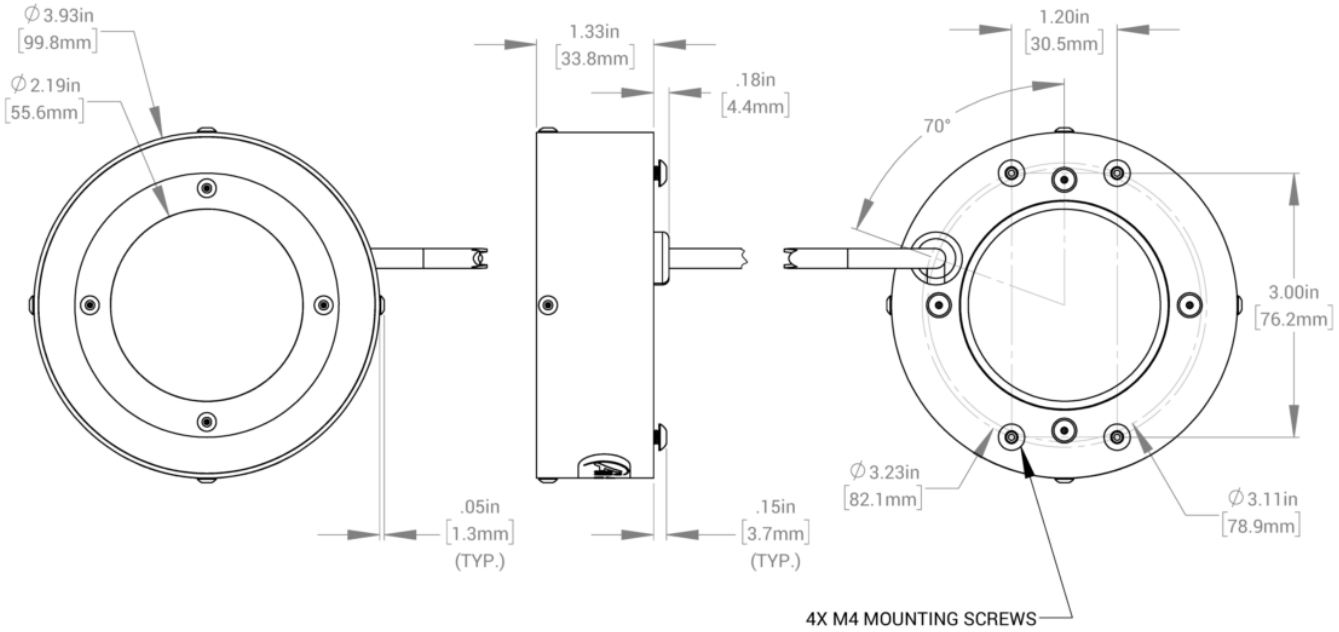

[RL5064 - MOUNTING OPTION B]

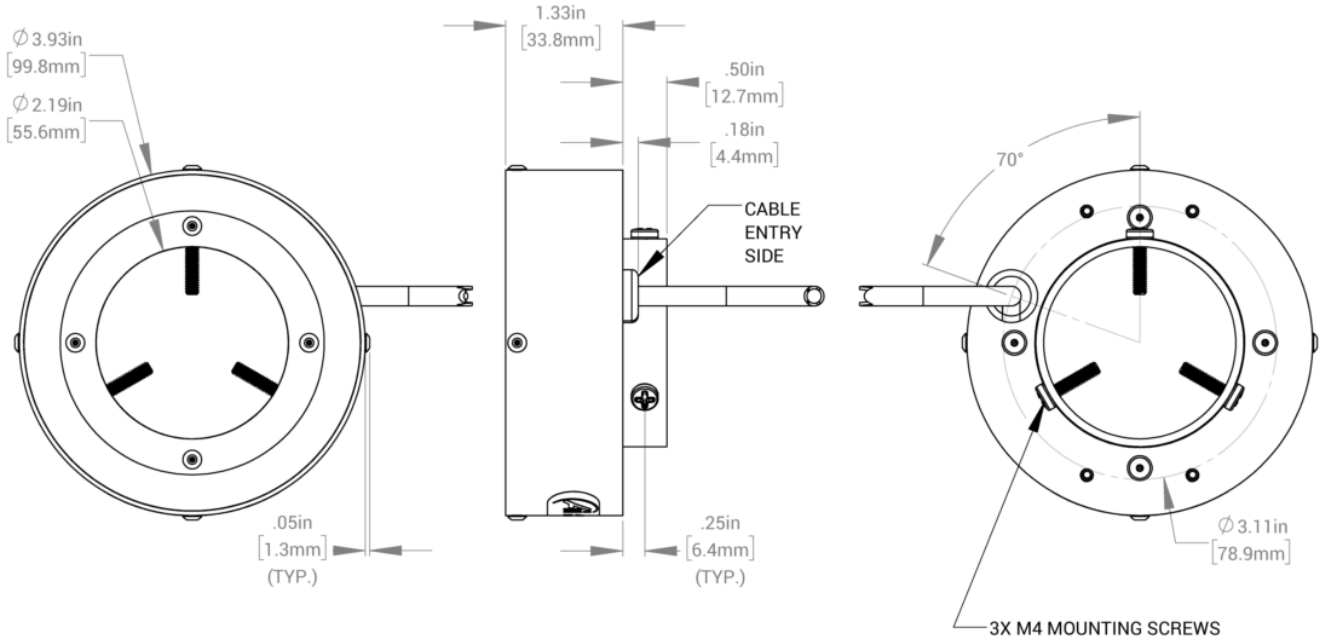

Warranty Information

Every Advanced illumination, Inc. (Ai) product is thoroughly inspected and tested before leaving the factory. Products are warranted to be free of defects in workmanship and materials for a period of FIVE YEARS from the original date of purchase. Should a defect develop during this period, customers may return the complete product, freight prepaid, to one of Ai's distributors or to the Ai factory. All product warranty returns require a Return Merchandise Authorization (RMA) number which is obtained from Customer Service. The RMA number must be clearly marked on the outside of the package. Ai will inspect the unit, and if a defect is found will, at our option, repair or replace the product without charge. Ai disclaims liability for any implied warranties, including implied warranties of "merchantability" and "fitness for a specific purpose." For products under warranty that have since been discontinued, Ai will make an effort to replace with equivalent parts; for circumstances that do not allow for equivalent replacement, Ai reserves the right to repair or replace these products with an updated version. Ai cannot be held responsible for the unauthorized or inappropriate use of its products. Any unauthorized repair or modifications will result in a voided warranty.
No Liability for Consequential Damages: In no event shall Ai be liable for any consequential, special, incidental, or indirect damages of any kind arising from the sale or use of the products.

Electromagnetic Compatibility

This product was tested and complies with the regulatory requirements and limits for electromagnetic compatibility (EMC) as stated in the product specifications. These requirements and limits are designed to provide reasonable protection against harmful interference only when the product is operated in its intended industrial electromagnetic environment. To minimize the potential for electromagnetic interference or unacceptable performance degradation, install and use this product in strict accordance with the instructions in the product documentation.

Customer Service

For information on existing orders, or to make an order adjustment, contact us Monday through Friday 8:00 am to 5:00 pm ET or send an email to orders@advancedillumination.com.

Company Information

Advanced Illumination
440 State Garage Road, Rochester, VT 05767
Phone: 802.767.3830
Fax: 802.767.2636
Email: info@advancedillumination.com
Web: advancedillumination.com
© 2021 Advanced illumination Inc. All rights reserved