| BL128 LENGTH MATRIX | |
|---|---|
| **PART #** | **LENGTH IN INCHES (mm)** |
| BL12801 | 1.50 (38.1 mm) |
| BL12802 | 2.50 (63.5 mm) |
| BL12803 | 3.50 (88.9 mm) |
| BL12804 | 4.50 (114.3 mm) |
| BL12805 | 5.50 (139.7 mm) |
| BL12806 | 6.50 (165.1 mm) |
| BL12807 | 7.50 (190.5 mm) |
| BL12808 | 8.50 (215.9 mm) |
| BL12809 | 9.50 (241.3 mm) |
| BL12810 | 10.50 (266.7 mm) |
| BL12811 | 11.50 (292.1 mm) |
| BL12812 | 12.50 (317.5 mm) |
| BL12813 | 13.50 (342.9 mm) |
| BL12814 | 14.50 (368.3 mm) |

| REVISIONS | | | |
|---|---|---|---|
| REV. | DESCRIPTION | DATE | DCN NO |
| - | FOR QUOTING PURPOSES ONLY | | |

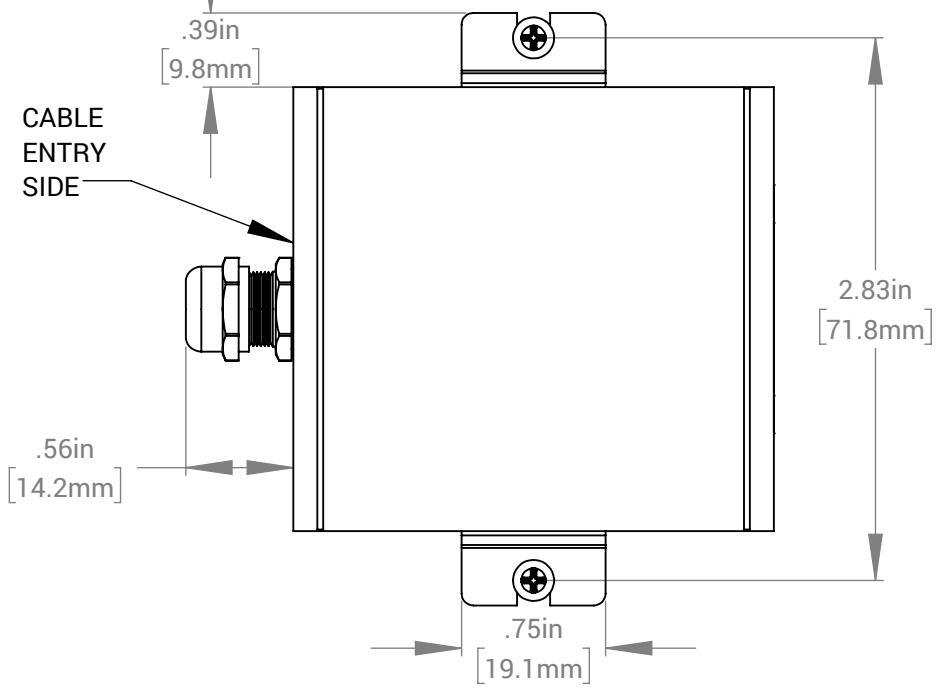


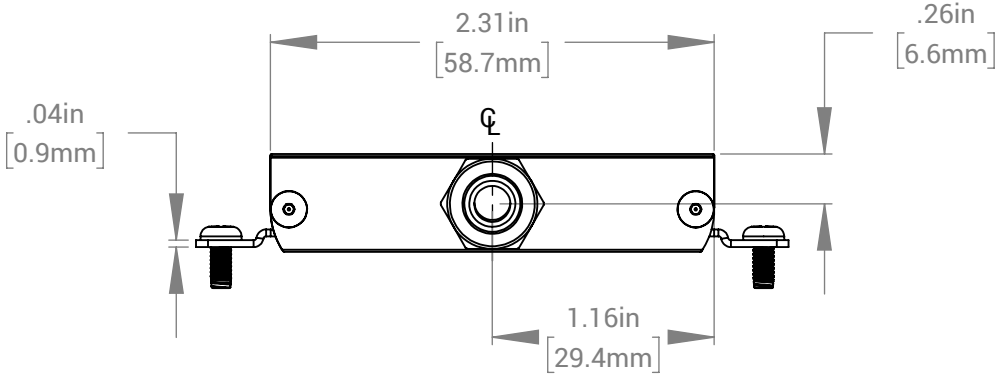


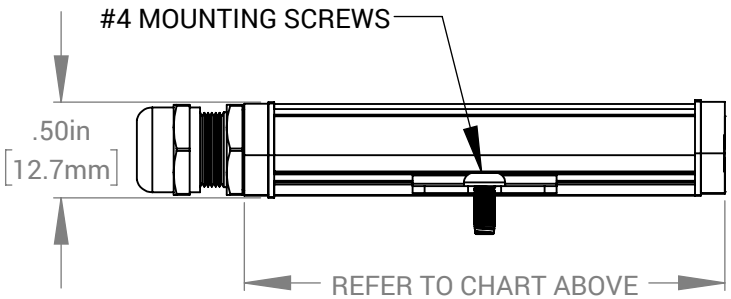


## 2" UNIT WEIGHT: 0.50 lbs

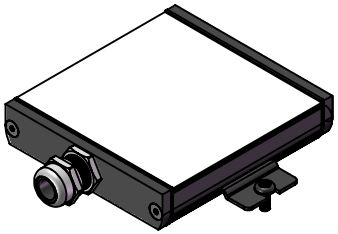

FOR REFERENCE ONLY


**PROPRIETARY AND CONFIDENTIAL**

THESE DRAWINGS AND SPECIFICATIONS ARE THE EXCLUSIVE PROPERTIES OF ADVANCED ILLUMINATION INCORPORATED ISSUED IN STRICT CONFIDENCE AND SHALL NOT, WITHOUT THE PRIOR WRITTEN PERMISSION OF ADVANCED ILLUMINATION INC BE REPRODUCED, COPIED OR USED FOR ANY PURPOSE WHATSOEVER EXCEPT THE MANUFACTURE OF ARTICLES FOR ADVANCED ILLUMINATION INC


| CUT USING: | |
|---|---|
| | |
| | |
| | |
| | |
| NEXT ASSY | USED ON |
| APPLICATION | |

**UNLESS OTHERWISE SPECIFIED:**

SURFACE SHOULD BE FREE OF SCRATCHES, BURRS, AND DENTS

DIMENSIONS ARE IN: INCHES

TOLERANCES

FRACTIONAL ± 1/16
ANGULAR: MACH ± 1 BEND ± 1
TWO PLACE DECIMAL ± .010
THREE PLACE DECIMAL ± .005

MAKE FROM

| | DATE | NAME |
|---|---|---|
| DRAWN | 24-MAR-21 | Ai |
| CHECKED | -- | -- |
| APPROVED | -- | -- |

MATERIAL
-

FINISH
-


ADVANCED ILLUMINATION
440 STATE GARAGE ROAD,
ROCHESTER, VERMONT 05767


TITLE:
DRAWING, INSTALLATION, BL128, (SEALED)

| SIZE | DWG. NO. | REV |
|---|---|---|
| A | BL128 (SEALED) | - |

SCALE: NTS | C CODE: - | SHEET 1 OF 1

O:\DESIGN ENGINEERING\INSTALLATION MODELS\BACK LIGHTS\BL128 (SEALED)\

1160.050006 REV-